Pneumatic Test Program – Component Locations (MVA)

Model 140 sedan shown

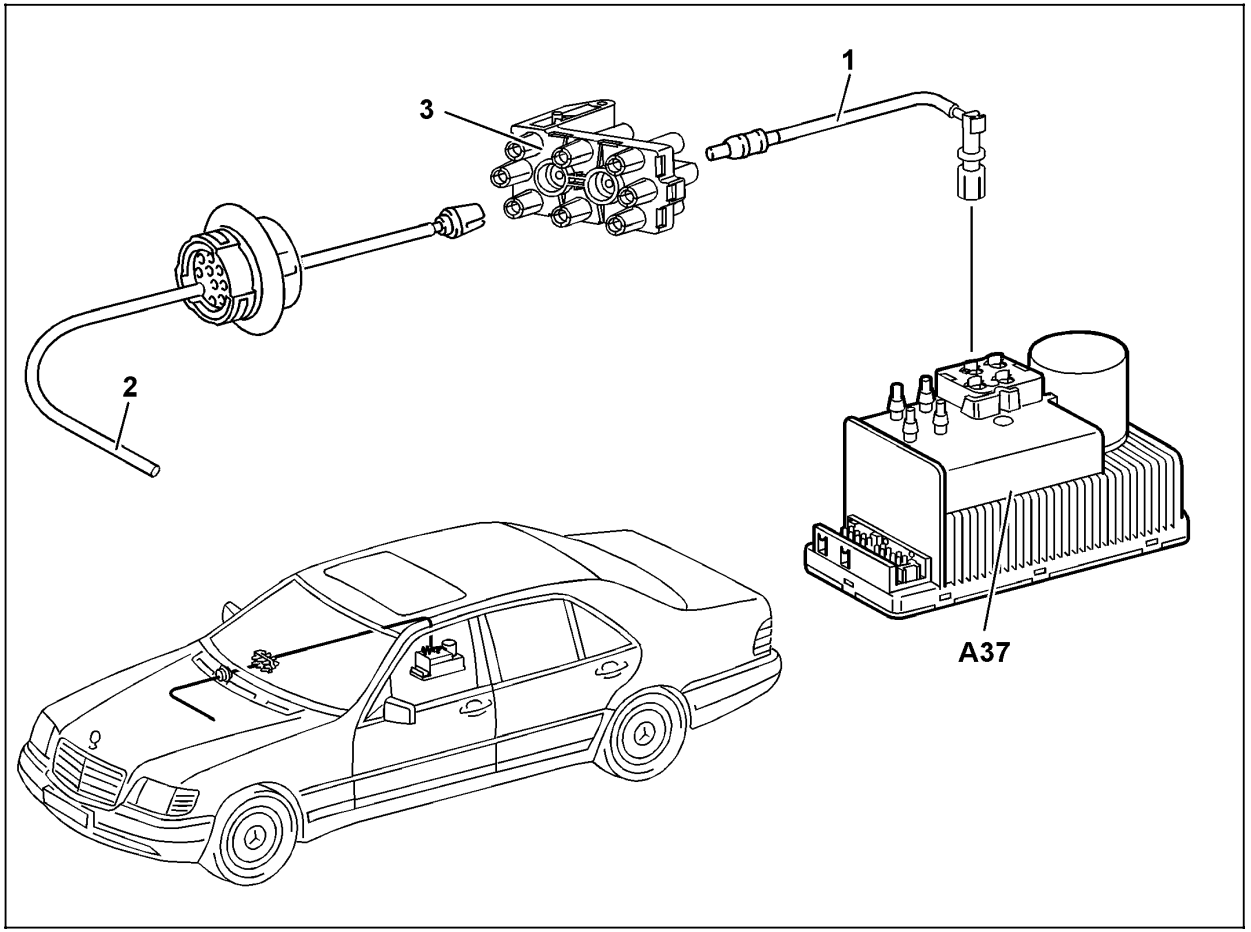

P80.20-0435-06

Figure 1

A37	PSE control module, combined functions
1	Pneumatic line, MVA, frame floor
2	Pneumatic line, MVA, engine compartment
3	Pneumatic distributor connector