5.1 Models 129.061/066

Diagnosis – Function Test

Test step/Test scope	Test condition	Nominal value	Possible cause/Remedy [1]
⇒ 1.0 **Brake torque control circuit**	Lift rear of vehicle so both rear wheels of vehicle can move freely. Secure vehicle properly. Engine: **RUNNING** Selector lever in transmission range “D“. Apply full throttle.	The rear wheels are noticeably braked, simultaneously; the high-pressure/return pump can be heard. Engine speed is reduced to approx. 1000 rpm.	23, Engines, Volume 3, section 6.1.

[1] Observe Preparation for Test, see 22.

Diagnosis – Complaint Related Diagnostic Chart

Complaint/Problem	Possible cause	Test step/Remedy [1]
ABS and ASR malfunction indicator lamps remain lit after starting engine, until ignition is switched **OFF.**	Switchover/solenoid valve (A7/3y5) Overvoltage protection relay module (87E, 7-pole) (K1/1)	23 ⇒ 35.0, 23 ⇒ 3.0, 5.0.
ABS and ASR malfunction indicator lamps come on after exceeding a speed of approx. 5 km/h (3mph), until ignition is switched **OFF.**	Solenoid valve relay (A7/3k1) Return/pressure pump relay (A7/3k2) Return/pressure pump motor (A7/3m1) ASR charging pump (M15)	23 ⇒ 2.0, 7.0, 23 ⇒ 25.0, 23 ⇒ 39.0.
ABS and ASR malfunction indicator lamps come on while driving, until ignition is switched **OFF.**	Vehicle speed sensor (L6/1, L6/2, L6/3, L6/4) ASR charging pump (M15) ABS/ASR control module (N30/1)	23 ⇒ 23.0, 26.0, 29.0, 32.0, 38.0, 39.0, ABS/ASR control module (N30/1).
ASR malfunction indicator lamp comes on while driving (electronic accelerator does not enter “limp-home“ mode), until ignition is switched **OFF**.	ASR charging pump (M15) Return/pressure pump motor (A7/3m1), pressure reservoir, hydraulic lines, connections leaking.	23 ⇒ 38.0, 39.0, 33.0, Engines, Volume 3, section 6.1
ASR malfunction indicator lamp comes on while driving, electronic accelerator enters “limp-home“ mode, (after brief free play, greater pedal effort required), until the ignition is switched **OFF.**	Electronic accelerator	Engines, Volume 3, section 6.1

[1] Observe Preparation for Test, see 22.

Electrical Test Program – Component Locations

Component Locations

Figure 1

4a	Brake fluid supply reservoir
6a	Right rear brake caliper
6b	Left rear brake caliper
13	Pressure reservoir
20	Free play rod (redundancy rod)
A1e17	ABS malfunction indicator lamp
A1e21	ASR function indicator lamp
A1e22	ASR malfunction indicator lamp
A7/3	ABS/ASR hydraulic unit
K1/1	Overvoltage protection relay module, (87E/87L/30a, 9-pole)
L6/1	Left front axle vehicle speed sensor
L6/2	Right front axle vehicle speed sensor
L6/3	Left rear axle vehicle speed sensor
L6/4	Right rear axle vehicle speed sensor
M15	ASR charging pump
M16/1	Electronic accelerator/cruise control actuator
N4/1	Electronic accelerator/cruise control module
N30/1	ABS/ASR control module
R25	Accelerator pedeal position sensor
S9/1	Stop lamp switch (ASD/ASR)
S40	Cruise control switch
S76	Snow chain switch (ASR) switch indicator

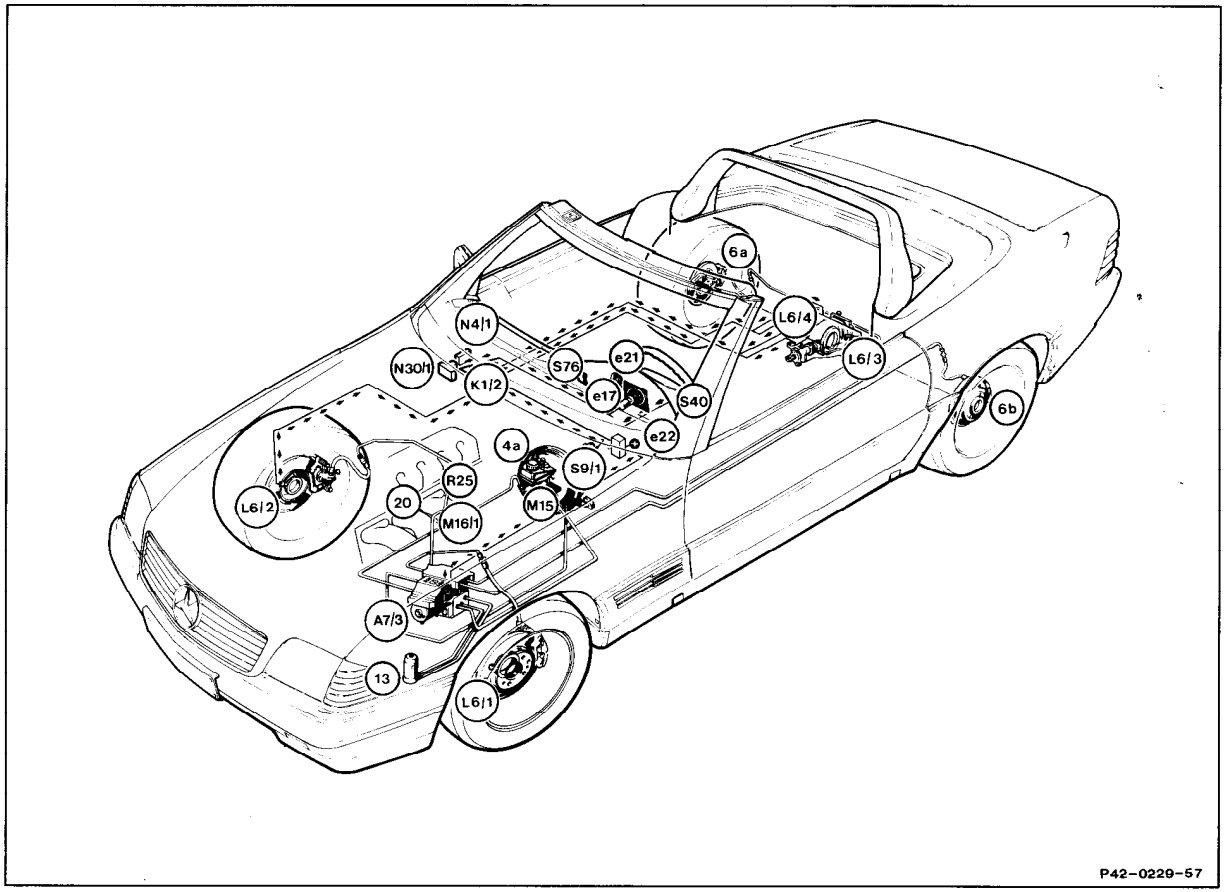

P42-0229-57

Electrical Test Program – Preparation for Test

1. Socket box sockets 1 ↔ 11 and 10 ↔ 34 must be bridged during the entire ABS/ASR test.
2. In test steps which include “Ignition: ON“, the LED ⊡ must illuminate i.e battery voltage ok.
3. Observe the ABS and ASR malfunction indicator lamps as well as the ASR function indicator only if required to do so in the “Nominal value“ column of a particular test step.
4. Always perform ⇒ 38.0 and ⇒ 39.0 in sequence.
5. After ⇒39.0 (reservoir full), correct in brake fluid reservoir.

Electrical wiring diagrams :
see “Electrical Troubleshooting Manual, Model 129, Volume 1, Group 42“.

⚠ **Never drive the vehicle with the ABS-adaptor (07) connected!**

Special Tools

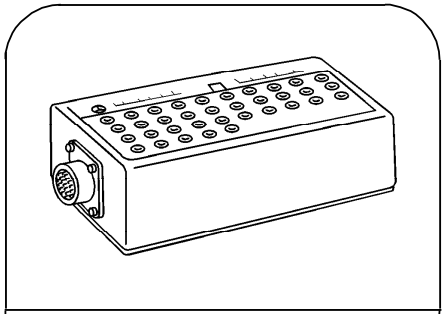

124 589 00 21 00

35-pin socket box

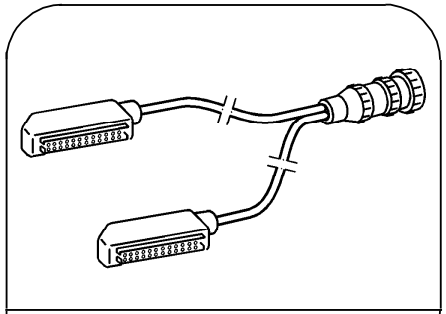

129 589 00 63 00

35-pin test cable

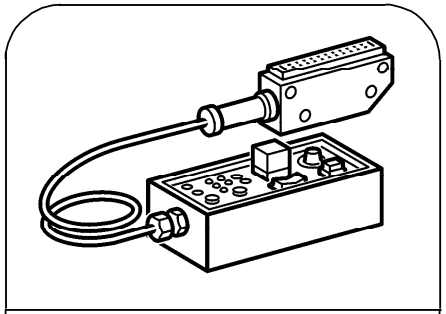

126 589 09 21 00

Test adapter for ABS

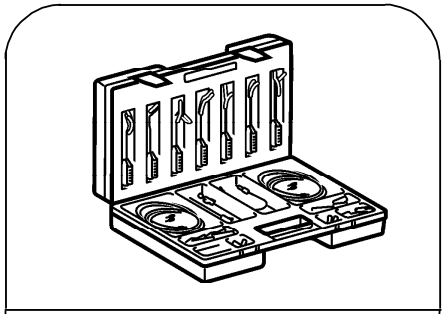

201 589 00 99 00

Electrical connecting set

Conventional tools, test equipment

Description	Brand, model, etc.
Multimeter [1]	Fluke models 23, 83, 85, 87

[1] Available through the MBUSA Standard Equipment Program.

Electrical Test Program – Preparation for Test

Connection Diagram – Test equipment

⚠
Unplug connector for ABS/ASR control module (N30/1) with ignition switched **OFF** (Figure 1)

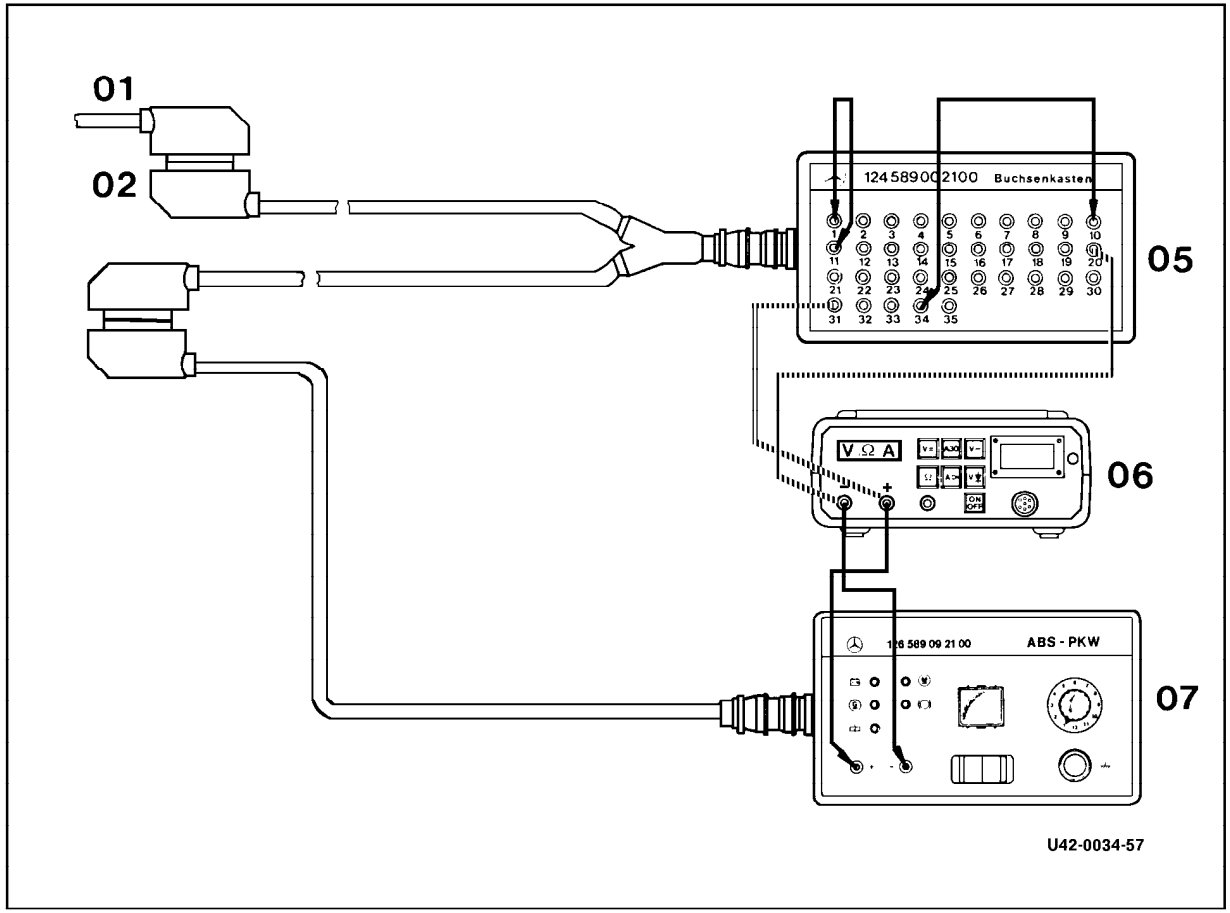

U42-0034-57

Figure 1

01	Vehicle wiring harness (ABS/ASR control module)	
02	Test cable	658 589 00 63 00
05	Socket box (35-pole)	124 589 00 21 00
06	Multimeter	
07	ABS-adaptor	126 589 09 21 00

Electrical Test Program – Preparation for Test

Connection Diagram – Multimeter to socket Box

(Example: ⇒ 8.0)

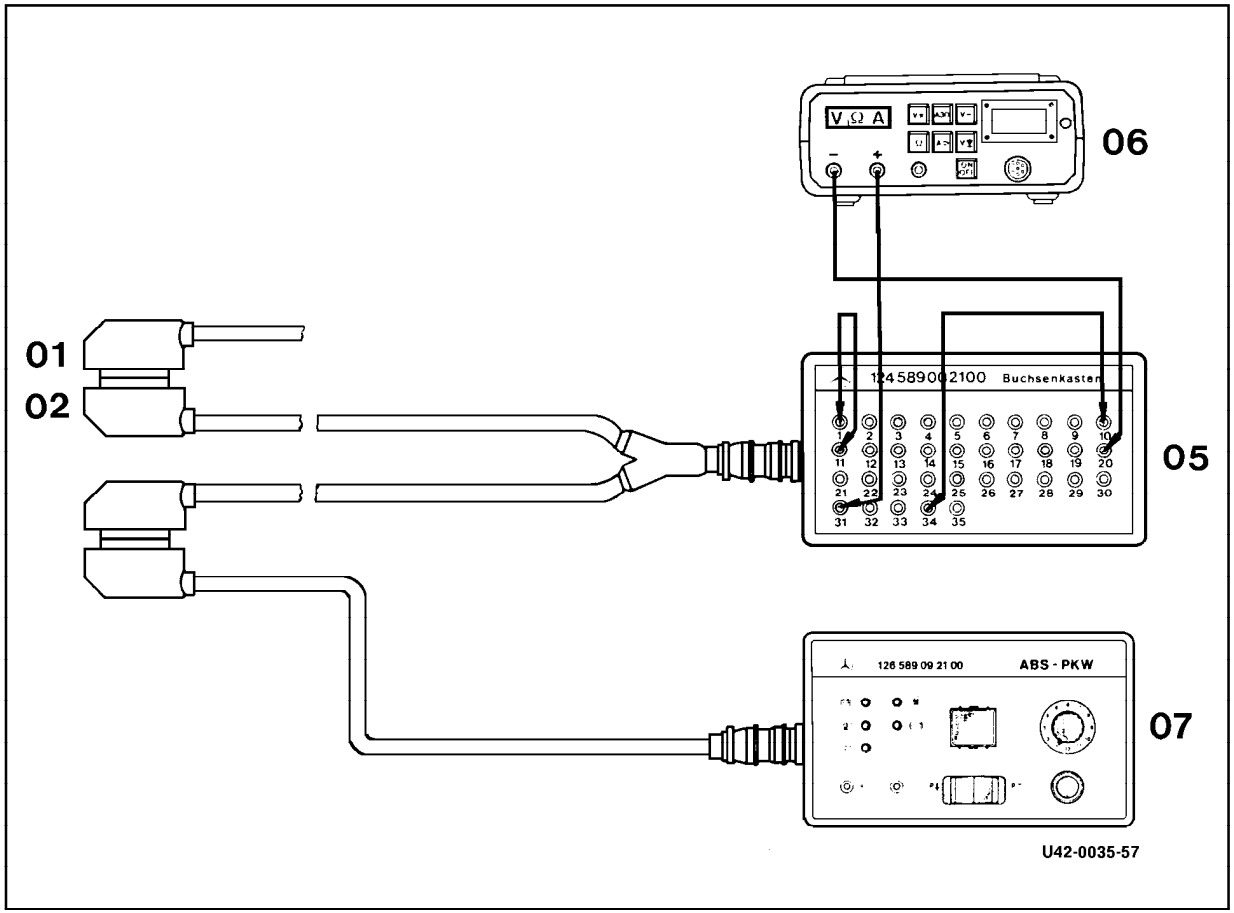

U42-0035-57

Figure 1

01	Vehicle wiring harness (ABS/ASR control module)	
02	Test cable	658 589 00 63 00
05	Socket box (35-pole)	124 589 00 21 00
06	Multimeter	
07	ABS-adaptor	126 589 09 21 00

Electrical Test Program – Test

⇒	1)	Test scope	Test connection	Test condition	Nominal value	Possible cause/Remedy
1.0		**Overvoltage protection relay module 87E, 7-pole (K1/1)**	–	Ignition: **OFF**	LED All: **OFF**	Wiring, Overvoltage protection relay module (K1/1) (Figure 1).
2.0		**Solenoid valve relay (A7/3k1)**	–	Ignition: **OFF**	LED All: **OFF**	Wiring, Solenoid valve relay (A7/3k1), (Figure 2).
3.0		**Overvoltage protection relay module (87E, 7-pole)**	Connect to	Ignition: **ON** **Note:** Select DC Volts range	11 – 14 V LED : **ON** : **ON** Malfunction indicator lamp ABS: **ON** ASR: **ON**	Wiring, Battery charge, Fuse for overvoltage protection relay module (K1/1). Wiring, Overvoltage protection relay module (K1/1), Solenoid valve relay (A7/3k1), ABS malfunction indicator lamp (A1e17), ASR malfunction indicator lamp (A1e22),
4.0		ASR function indicator lamp (A1e21)	–	Ignition: **ON**	ASR function indicator lamp: **ON**	Wiring, ASR function indicator lamp (A1e21).

1) ABS Tester Adaptor Position

Electrical Test Program – Test

⇒		Test scope	Test connection	Test condition	Nominal value	Possible cause/Remedy
5.0	1	**Circuit 61**	–	Start engine	LED Ⓖ : **OFF**	Wiring, Generator (G2).
6.0	1	**Stop lamp switch (S9/1)**	–	Ignition: **ON** Depress brake pedal	LED (◯): **ON**	Wiring, Solenoid valve relay (A7/3k1), (Figure 2), Stop lamp switch (S9/1).
7.0	2	**Solenoid valve relay (A7/3k1)**	Connect to	Ignition: **ON**	11 – 14 V LED ⊟+ : **ON** Ⓖ : **ON** ⊏⊐: **ON** Malfunction indicator lamp ABS: **OFF** ASR: **OFF**	Wiring, Battery charge, Fuse for overvoltage protection relay module (K1/1). Wiring, Overvoltage protection relay module (K1/1), Solenoid valve relay (A7/3k1), ABS malfunction indicator lamp (A1e17), ASR malfunction indicator lamp (A1e22).
8.0	2	**ASR charging pump (M15)** Voltage supply	20 — 31 20 — 22 20 — 32	Ignition: **ON**	11 – 14 V	Wiring.

Electrical Test Program – Test

⇒		Test scope	Test connection	Test condition	Nominal value	Possible cause/Remedy
9.0	3	**Solenoid valve relay (A7/3k1),** Diode L1	Connect to	Ignition: **ON**	0.4 – 1.5 V LED : **ON** : **ON**	Wiring, Solenoid valve relay (A7/3k1).
10.0	3	**Solenoid valve relay (A7/3k1),** Diode L2	20 — — 17	Ignition: **ON**	0.4 – 1.5 V	Wiring, Solenoid valve relay (A7/3k1).
11.0	4	**Left front axle vehicle speed sensor (L6/1)** Internal resistance	Connect to	Ignition: **ON**	1.1 – 2.3 k Ω	Wiring, Left front axle vehicle speed sensor (L6/1).
12.0	4	**Left front vehicle speed sensor (L6/1)** Insulation resistance	Connect to	Ignition: **ON** Press button:	> 20 k Ω	Left front axle vehicle speed sensor (L6/1).
13.0	5	**Right front axle vehicle speed sensor (L6/2)** Internal resistance	Connect to	Ignition: **ON**	1.1 – 2.3 k Ω	Wiring, Right front axle vehicle speed sensor (L6/2).

Electrical Test Program – Test

⇒		Test scope	Test connection	Test condition	Nominal value	Possible cause/Remedy
14.0	5	**Right front axle vehicle speed sensor (L6/2)** Insulation resistance	Connect to	Ignition: **ON** Press button: ⊥	> 20 k Ω	Right front vehicle speed sensor (L6/2).
15.0	6	**Left rear axle vehicle speed sensor (L6/3)** Internal resistance	Connect to	Ignition: **ON**	0.6 – 1.6 k Ω	Wiring, Left rear axle vehicle speed sensor (L6/3).
16.0	6	**Left rear axle vehicle speed sensor (L6/3)** Insulation resistance	Connect to	Ignition: **ON** Press button: ⊥	> 20 k Ω	Left rear axle vehicle speed sensor (L6/3).
17.0	7	**Right rear axle vehicle speed sensor (L6/4)** Internal resisitance	Connect to	Ignition: **ON**	0.6 – 1.6 k Ω	Wiring, Right rear axle vehicle speed sensor (L6/4).
18.0	7	**Right rear axle vehicle speed sensor (L6/4)** Insulation resistance	Connect to	Ignition: **ON** Press button: ⊥	> 20 k Ω	Right rear axle vehicle speed sensor (L6/4).

Electrical Test Program – Test

⇒		Test scope	Test connection	Test condition	Nominal value	Possible cause/Remedy
19.0	8	**Left front axle solenoid valve (A7/3y1)** Internal resistance	Connect to	Ignition: **OFF** Press button: ⊥	4 – 6 Ω	Wiring, ABS/ASR hydraulic unit (A7/3), (Figure 3).
20.0	9	**Right front axle solenoid valve(A7/3y2)** Internal resistance	Connect to	Ignition: **OFF** Press button: ⊥	4 – 6 Ω	Wiring, ABS/ASR hydraulic unit (A7/3), (Figure 3).
21.0	10	**Left rear axle solenoid valve (A7/3y3)** Internal resistance	Connect to	Ignition: **OFF** Press button: ⊥	4 – 6 Ω	Wiring, ABS/ASR hydraulic unit (A7/3), (Figure 3).
22.0	11	**Right rear axle solenoid valve (A7/3y4)** Internal resistance	Connect to	Ignition: **OFF** Press button: ⊥	4 – 6 Ω	Wiring, ABS/ASR hydraulic unit (A7/3), (Figure 3).

Electrical Test Program – Test

⇒		Test scope	Test connection	Test condition	Nominal value	Possible cause/Remedy
23.0	4	**Left front axle vehicle speed sensor (L6/1)** Voltage	Connect to	Raise vehicle Ignition: **ON** Turn wheel at approximately one revolution/second.	0.1V~	Excessive wheel bearing play, open circuit or wires connected incorrectly, Left front axle vehicle speed sensor (L6/1).
24.0	8	**Left front axle solenoid valve (A7/3y1)** Pressure retention	remains connected	Vehicle raised Ignition: **ON** Turn wheel at approximately one revolution/second. Press switch: **"P="** Apply brake pedal.	LED : **ON** : **ON** : **ON** : **ON** Wheel must be able to rotate.	Brake lines on hydraulic unit reversed (Figure 3), Wires reversed, ABS/ASR hydraulic unit (A7/3).
25.0	8	**Left front axle solenoid valve (A7/3y1)** Pressure reduction	remains connected	Vehicle raised Ignition: **ON** Apply brake pedal. Press switch: **"P ↓ "** Turn wheel at approximately one revolution/second.	LED : **ON** : **ON** : **ON** : **ON** : **ON** Wheel must be able to rotate.	Return pressure pump relay (A7/3k2), ABS/ASR hydraulic unit (A7/3)

Electrical Test Program – Test

⇒		Test scope	Test connection	Test condition	Nominal value	Possible cause/Remedy
26.0	5	**Right front axle vehicle speed sensor (L6/2)**	remains connected	Vehicle raised Ignition: **ON** Turn wheel at approximately one revolution/second.	0.1V~	Excessive wheel bearing play, open circuit or wires connected incorrectly, Right front axle vehicle speed sensor (L6/2).
27.0	9	**Right front axle solenoid valve (A7/3y2)**	remains connected	Vehicle raised Ignition: **ON** Turn wheel at approximately one revolution/second. Press switch: **"P="** apply brake pedal.	LED : **ON** : **ON** : **ON** : **ON** Wheel must be able to rotate.	Brake lines on hydraulic unit reversed (Figure 3), Wires reversed, ABS/ASR hydraulic unit (A7/3).
28.0	9	**Right front axle solenoid valve (A7/3y2)**	remains connected	Vehicle raised Ignition: **ON** Apply brake pedal. Press switch: **"P ↓ "** Turn wheel at approximately one revolution/second.	LED : **ON** : **ON** : **ON** : **ON** : **ON** Wheel must be able to rotate.	Return/pressure pump relay (A7/3k2) (Figure 2), ABS/ASR hydraulic unit (A7/3).

Electrical Test Program – Test

⇒		Test scope	Test connection	Test condition	Nominal value	Possible cause/Remedy
29.0	6	**Left rear axle vehicle speed sensor (L6/3)** Voltage	remains connected	Vehicle raised Ignition: **ON** Turn wheel at approximately one revolution/second.	0.1V~	Open circuit or wires connected incorrectly, left rear axle vehicle speed sensor (L6/3).
30.0	10	**Left rear axle solenoid valve (A7/3y3)**	remains connected	Vehicle raised Ignition: **ON** Turn wheel at approximately one revolution/second. Press switch: **"P="** apply brake pedal.	LED : **ON** : **ON** : **ON** : **ON** Wheel must be able to rotate.	Brake lines on hydraulic unit reversed (Figure 3), Wires reversed, ABS/ASR hydraulic unit (A7/3).
31.0	11	**Left rear axle solenoid valve (A7/3y3)**	remains connected	Vehicle raised Ignition: **ON** Apply brake pedal. Press switch: **"P ↓"** Turn wheel at approximately one revolution/second.	LED : **ON** : **ON** : **ON** : **ON** : **ON** Wheel must be able to rotate.	Return/pressure pump relay (A7/3k2) (Figure 2), ABS/ASR hydraulic unit (A7/3).

Electrical Test Program – Test

⇒		Test scope	Test connection	Test condition	Nominal value	Possible cause/Remedy
32.0	7	**Right rear axle vehicle speed sensor (L6/4)**	remains connected	Vehicle raised Ignition: **ON** Turn wheel at approximately one revolution/second.	0.1V~	Open circuit or wires connected incorrectly, left rear axle vehicle speed sensor (L6/4).
33.0	11	**Right rear axle solenoid valve (A7/3y4)**	remains connected	Vehicle raised Ignition: **ON** Turn wheel at approximately one revolution/second. Press switch: **"P="** apply brake pedal.	LED : **ON** : **ON** : **ON** : **ON** Wheel must be able to rotate.	Brake lines on hydraulic unit reversed (Figure 3), Wires reversed, ABS/ASR hydraulic unit (A7/3).
34.0	11	**Right rear axle vehicle speed sensor (A7/3y4)**	remains connected	Vehicle raised Ignition: **ON** Apply brake pedal. Press switch: **"P ↓ "** Turn wheel at approximately one revolution/second.	LED : **ON** : **ON** : **ON** : **ON** : **ON** Wheel must be able to rotate.	Return/pressure pump relay (A7/3k2) (Figure 2), ABS/ASR hydraulic unit (A7/3).

Electrical Test Program – Test

⇒		Test scope	Test connection	Test condition	Nominal value	Possible cause/Remedy
35.0		**Switchover/solenoid valve (A7/3y5)**	32 — Ω — 30	Ignition: **OFF**	2 – 4 Ω	Wiring, ABS/ASR hydraulic unit (A7/3).
36.0		**Snow chain switch (ASR) with indicator (S76)**	20 — 3	Ignition: **ON**	Function indicator in S76 comes on.	Wiring, Snow chain switch (ASR) with indicator (S76).
37.0		**Snow chain switch (ASR) with indicator (S76)**	20 — V — 5	Ignition: **ON** Operate switch (S76) on and off	**ON:** < 1 V **OFF:** 11 – 14 V	Wiring, Snow chain switch (ASR) with indicator (S76).

Electrical Test Program – Test

⇒		Test scope	Test connection	Test condition	Nominal value	Possible cause/Remedy
38.0	2	**Pressure switch (A7/3s1)**	20 — V — 8	Ignition: **ON** Briefly open (maximum 2 seconds) bleed connection “SP“ (Figure 3) on hydraulic unit (A7/3) according to work instructions.	0 V (Pressure reservoir full) 11 – 14 V (Signal to pressurize).	Wiring, ABS/ASR hydraulic unit (A7/3).
39.0	8	**ASR charging pump (M15), return/pressure pump motor (A7/3m1)**	Connect to 33 — 34 Bridge for maximum of 60 seconds.	Ignition: **ON** Press switch:**“P “** (maximum of 60 seconds)	11 – 14 V to 0 V Pumps can be heard running (running time approximately 40 seconds until pressure reservoir is full).	Wiring, ABS/ASR hydraulic unit (A7/3), 33.

Electrical Test Program – Test

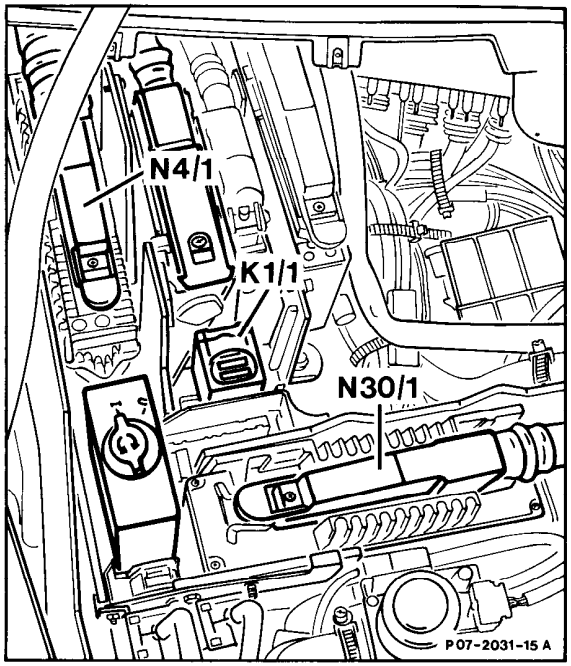

P07-2031-15A

Figure 1

K1/1 Overvoltage protection relay module (87E, 7-pole)

N4/1 Electronic accelerator/cruise control module

N30/1 ABS/ASR control module

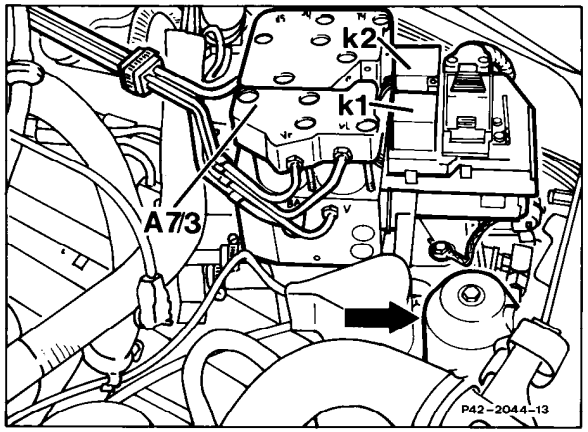

P42-2044-13

Figure 2

A7/3 ABS/ASR hydraulic unit

A7/3k1 Solenoid valve relay

A7/3k2 High-pressure/return pump relay

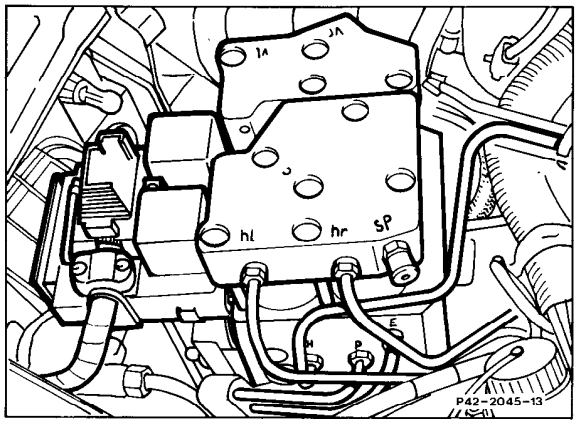

P42-2045-13

Figure 3

A7/3 ABS/ASR hydraulic unit

Electrical Test Program – Test

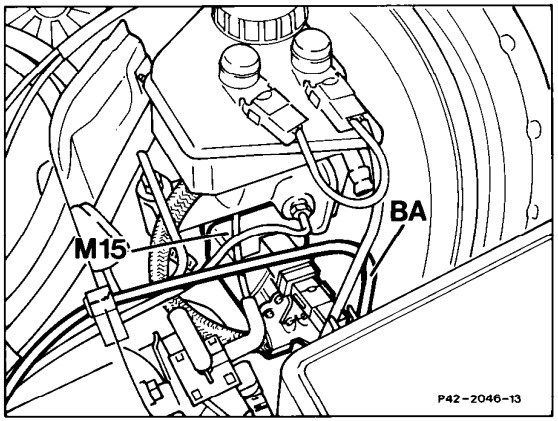

P42-2046-13

Figure 4

M15 ASR charging pump

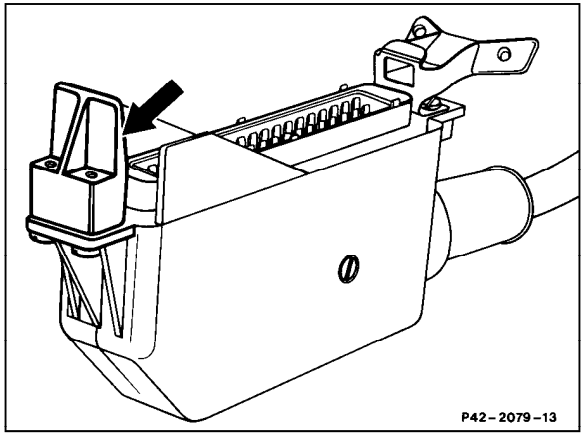

P42-2079-13

Figure 5

ABS-adapter plug

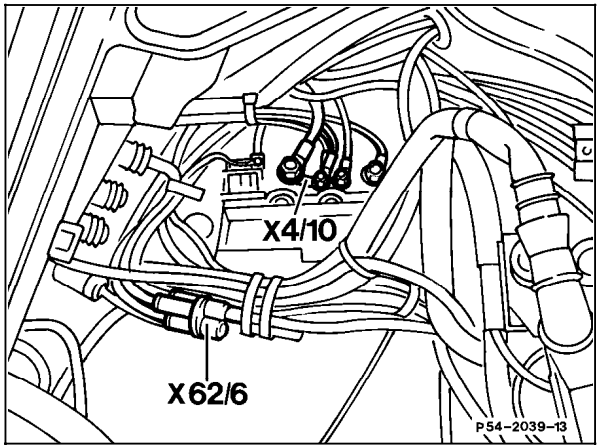

P54-2039-13

Figure 6

X4/10 Terminal block (terminal 30/30Ue/61e/87L)

X62/6 Right front axle vehicle speed sensor connector (component compartment)

Electrical Test Program – Test

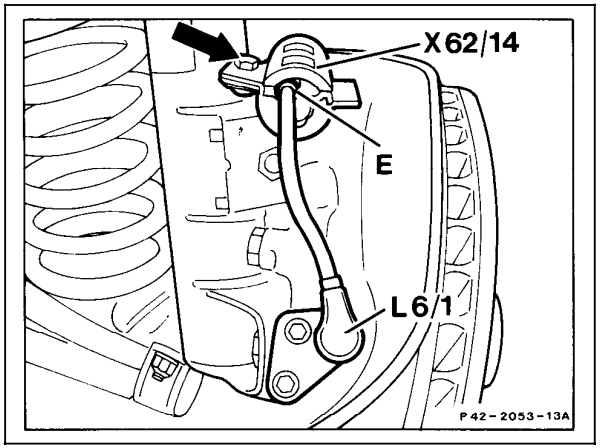

P42-2053-13A

Figure 7

L6/1 Left front axle vehicle wheel sensor

X62/14 Left front axle vehicle speed sensor connector (axle spindle)

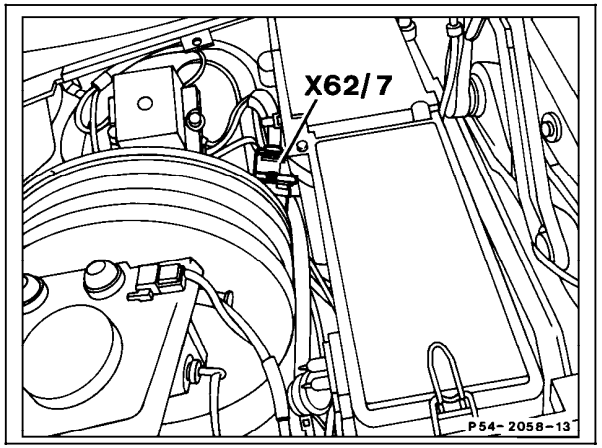

P54-2058-13

Figure 8

X62/7 Left front axle vehicle speed sensor connector (component compartment)

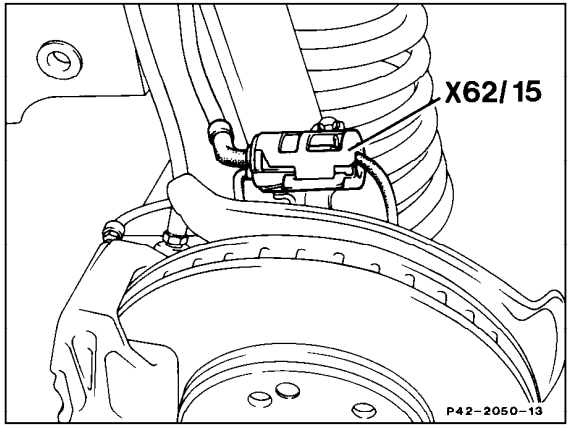

P42-2050-13

Figure 9

X62/15 Right front axle vehicle speed sensor connector (axle spindle)

Electrical Test Program – Test

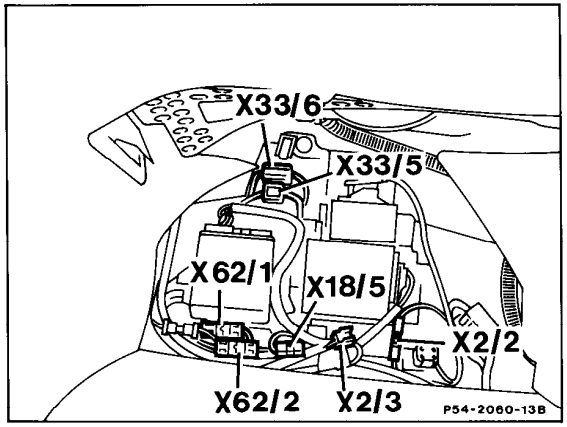

P54-2060-13B

Figure 10

X62/1 Left rear axle vehicle wheel sensor connector

X62/2 Right rear axle vehicle speed sensor connector (2-pole)

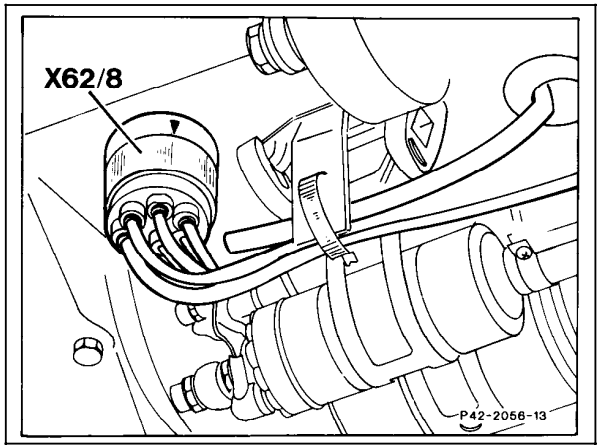

P42-2056-13

Figure 11

X62/8 Rear axle multiple circuit junction connector

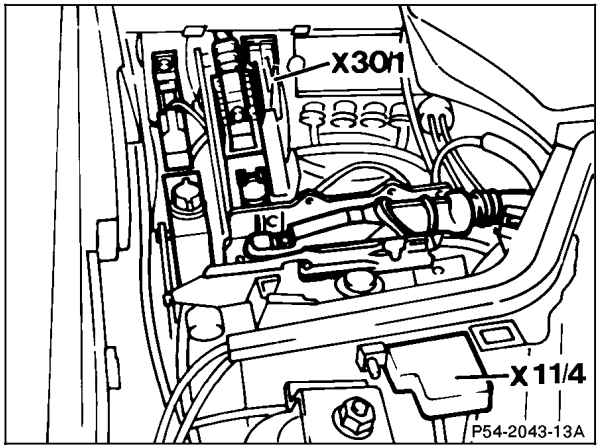

P54-2043-13A

Figure 12

X30/1 Multi-function block connector

Electrical Test Program – Test

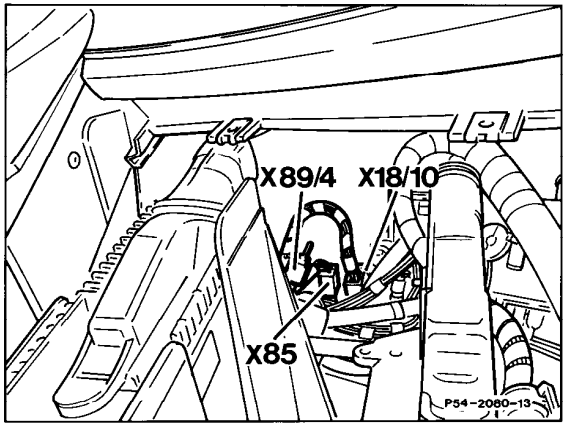

P54-2080-13

Figure 13

X18/10 Interior/ASR connector (8-pole)

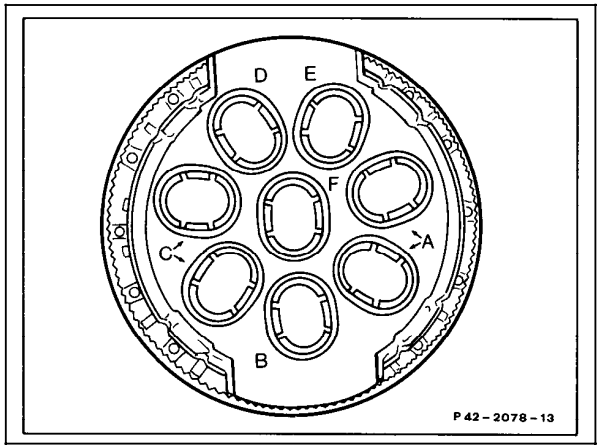

P42-2078-13

Figure 14

Layout of connector X62/8

Hydraulic Test Program – Component locations

Figure 1

4a	Brake fluid suply reservoir
6a	Right rear brake caliper
6b	Left rear brake caliper
13	Pressure reservoir
20	Free play rod (redundancy rod)
A1e17	ABS malfunction indicator lamp
A1e21	ASR function indicator lamp
A1e22	ASR malfunction indicator lamp
A7/3	ABS/ASR hydraulic unit
K1/2	Overvoltage protection relay module (87E/87L/30a, 9-pole)
L6/1	Left front axle vehicle speed sensor
L6/2	Right front axle vehicle speed sensor
L6/3	Left rear axle vehicle speed sensor
L6/4	Right rear axle vehicle speed sensor
M15	ASR charging pump
M16/1	Electronic accelerator/cruise control actuator
N4/1	Electronic accelerator/cruise control module
N30/1	ABS/ASR control module
R25	Accelerator pedal position sensor
S9/1	Stop lamp switch (ASD/ASR)
S40	Cruise control switch
S76	Snow chain switch (ASR) switch indicator

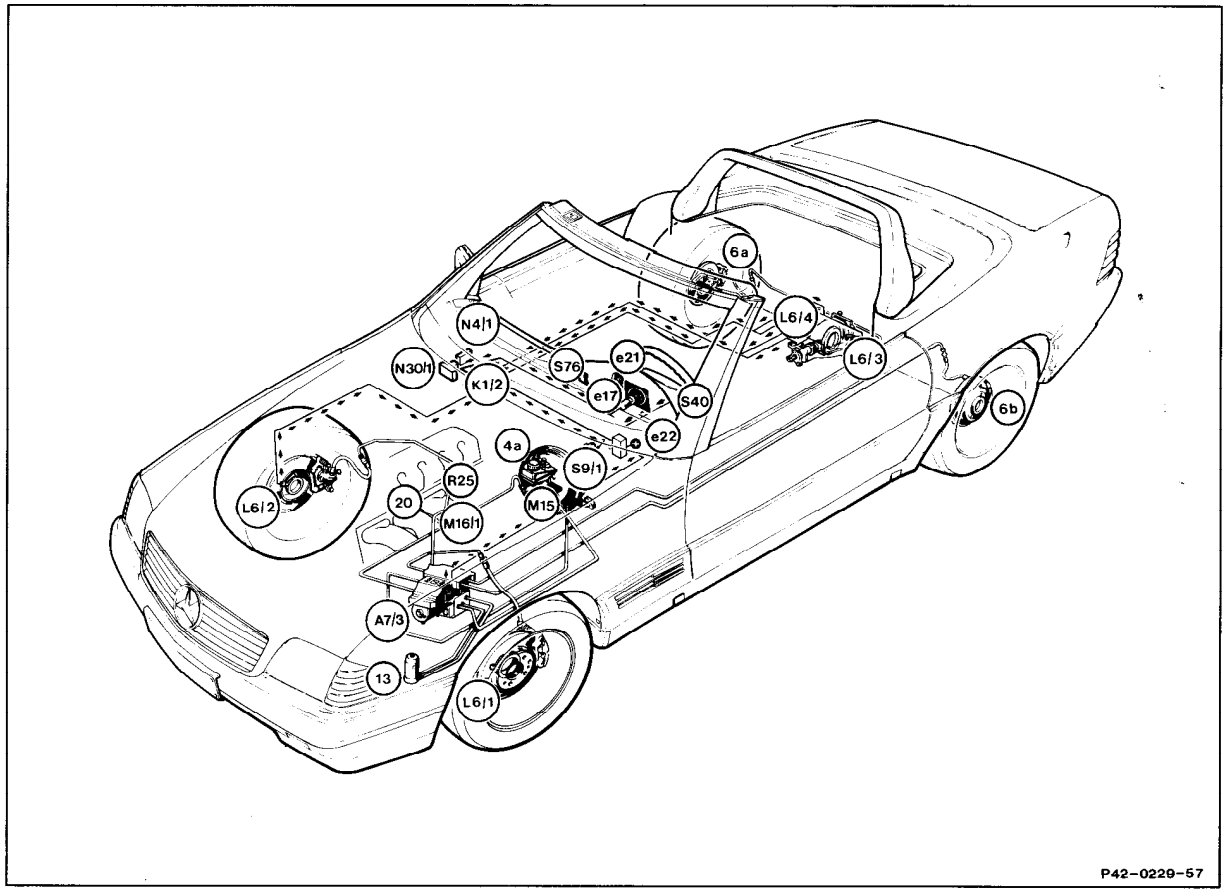

P42-0229-57

Hydraulic Test Program – Preparation for Test

1. Connect the brake bleeder before beginning the test.

2. The hydraulic system must be depressurized before performing any work on the hydraulics. To do so, switch off the ignition. Slowly open the relief screw “SP“ on the ABS/ASR hydraulic unit (A7/3) and allow the contents of the pressure reservoir to drain into a container for brake fluid.

3. After completing the test, first load the pressure reservoir (connect the ABS/ASR control module and start engine, let engine run until reservoir is full), then correct fluid level in brake fluid reservoir.

4. ⇒ 1.0: the specific large tolerance in the pressure value (1.8 – 11 bar) is dependent on the manufacturing tolerances in the charging pump, ABS/ASR hydraulic unit and pressure reservoir check valve.

5. ⇒ 2.0 and 3.0: In the case of a defective return/pressure pump motor(A7/3m1), there will either be no build-up or too slow of a pressure build-up (max. 60 seconds). In the case of a defective pressure reservoir, the pressure build-up will occur quickly to values up to 50 bar and then proceed slowly up to maximium pressure or will occur quickly and steadily up to maximum pressure.

⚠ **WARNING!**
This system contains very high hydraulic pressures (250 – 3675 PSI). Severe injury may occur if you come in contact with hydraulic fluid under pressures such as these. Be absolutely sure that the system is depressuized before loosening **any** fittings.

Hydraulic Test Program – Preparation for Test

Special Tools

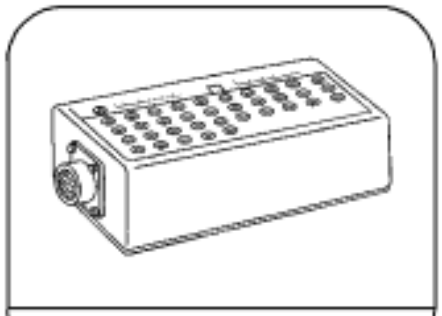

124 589 00 21 00

35-pin socket box

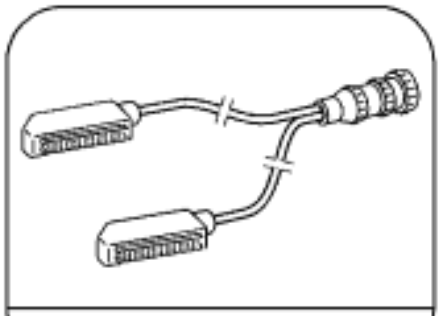

129 589 00 63 00

35-pin test cable

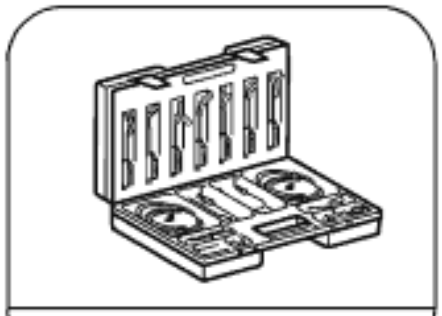

201 589 00 99 00

Electrical connecting set

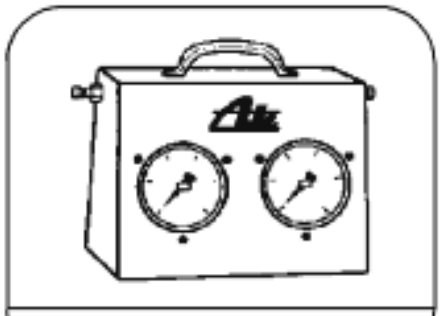

929 589 00 21 00

Pressure tester

Conventional tools, test equipment

Description	Brand, model, etc.
Brake bleeder [1]	Ammco model 7301 with adaptor no. 7309

[1] Available through the MBUSA Standard Equipment Program.

Hydraulic Test Program – Preparation for Test

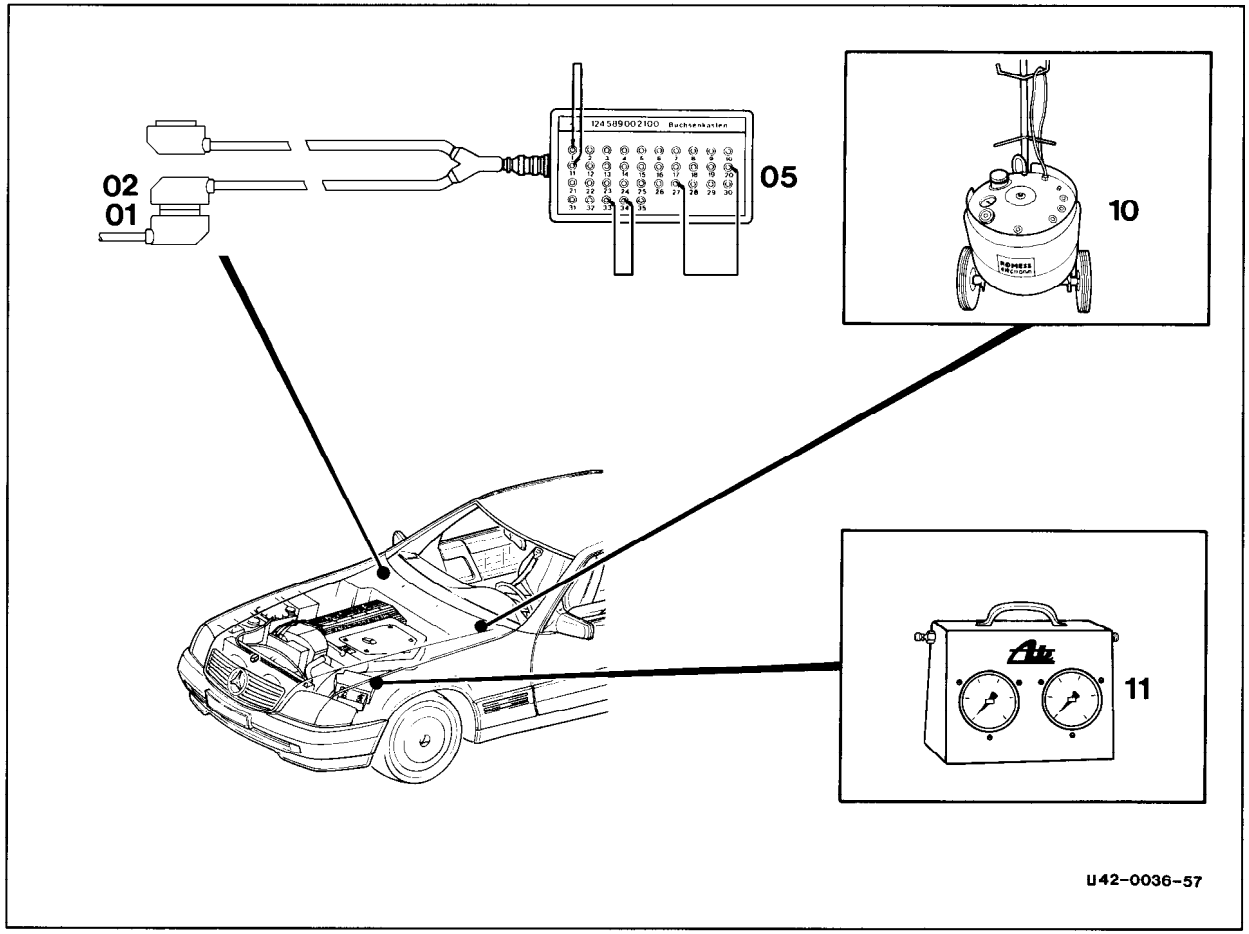

U42-0036-57

Figure 1

01	Vehicle wiring harness (ABS/ASR control module)	
02	Test cable	658 589 00 63 00
05	Socket box (35-pole)	124 589 00 21 00
10	Brake bleeder	
11	Pressure tester	929 589 00 21 00

Hydraulic Test Program – Preparation for Test

Connection of Test Equipment

⚠

Test step 1

Unplug connector for ABS/ASR control module (N30/1) with ignition switched **OFF**

(33, Figure 3)

Figure 2

Socket box sockets bridged (Example: ⇒ 1.0)

01	Vehicle wiring harness (ABS/ASR control module)	
02	Test cable	658 589 00 63 00
05	socket box (35-pole)	124 589 00 21 00

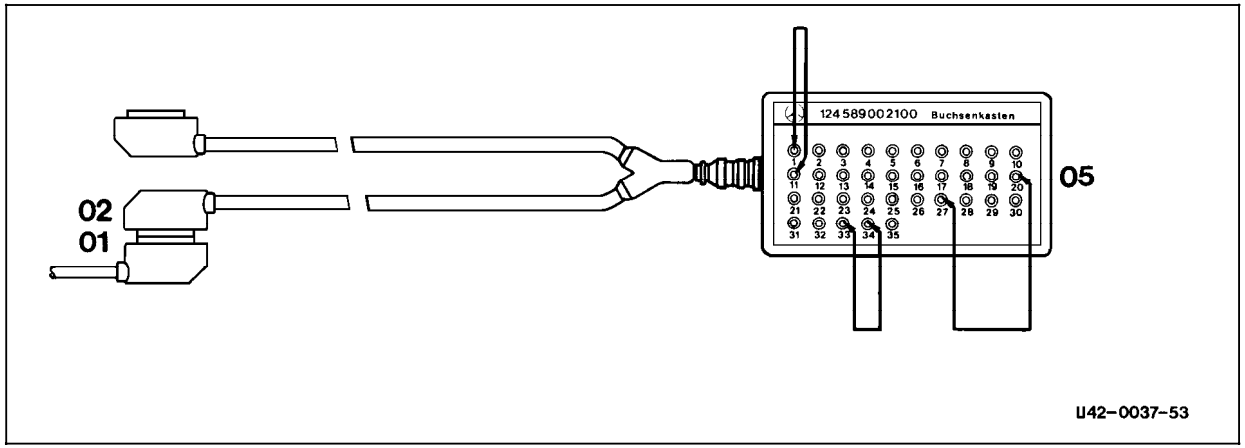

U42-0037-53

Hydraulic Test Program – Preparation for Test

Test steps 1.0, 2.0, 3.0
Pressure tester connected to ABS/ASR hydraulic unit (A7/3) connection “SP“.

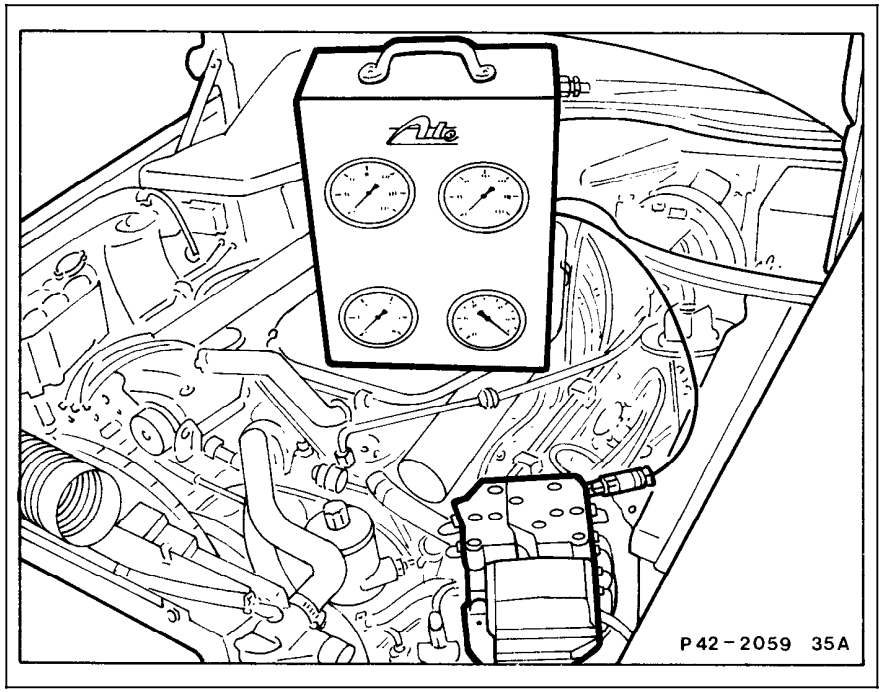

Figure 3

P42-2059-35A

Hydraulic Test Program – Test

⇒		Test scope	Test connection	Test condition	Nominal value	Possible cause/Remedy
1.0		**ASR charging pump (M15)**	10 bar at "SP" 1 — 11 20 — 27 33 — 34	Ignition: **ON** (max. 60 seconds)	1.8 – 11 bar All: **OFF**	Wiring, Hydraulic connections leak, ASR charging pump (M15).
2.0		**Return/pressure pump motor (A7/3m1)**	250 bar at "SP" **Warning** High Pressure	Engine: **START**	Pressure rises quickly to 50 – 110 bar, proceed to increase slowly to 150 – 200 bar. Charging time: max. 60 seconds.	⇒ 3.0, 23 ⇒ 38.0, 39.0, Hydraulic connections leak, Hydraulic unit (A7/3).

Electrical Test Program – Test

⇒		Test scope	Test connection	Test condition	Nominal value	Possible cause/Remedy
3.0		**Pressure reservoir**	250 bar at “SP“ ⚠ **Warning** High Pressure	Engine: **START**	Pressure rises quickly to 50 – 110 bar, proceed to increase slowly to 150 – 200 bar. Charging time: max. 60 seconds.	Hydraulic connections leak, Presure reservoir.

Hydraulic Test Program – Test

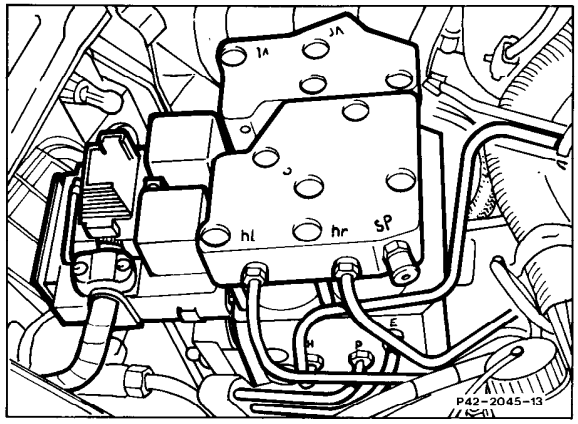

P42-2045-13

Figure 1

ABS/ASR hydraulic unit (A7/3) relief screw “SP“

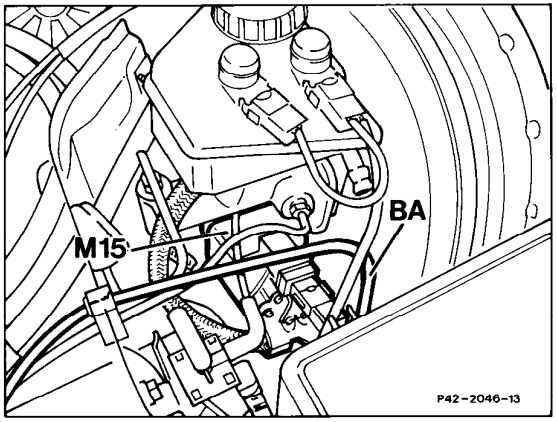

P42-2046-13

Figure 2

M15 ABS/ASR charging pump

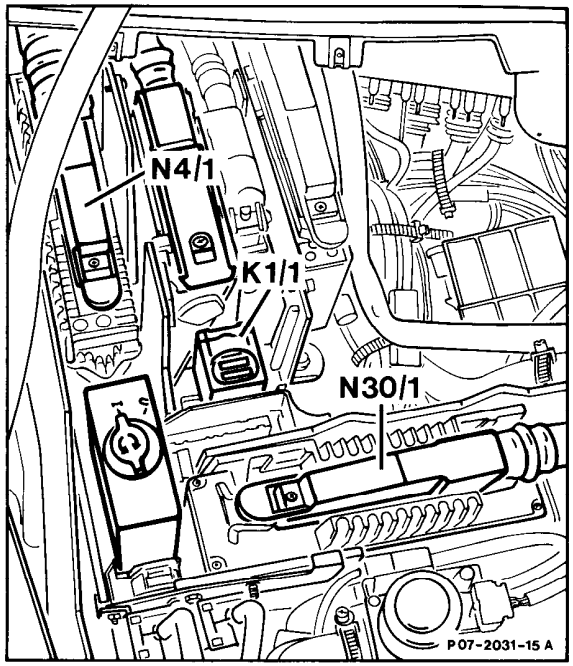

P07-2031-15A

Figure 3

N30/1 ABS/ASR control module

Hydraulic Test Program – Test

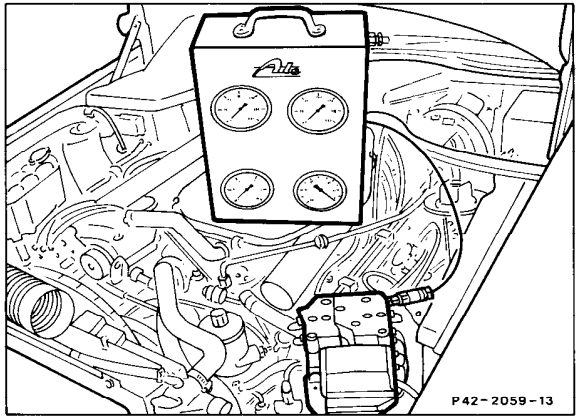

P42-2059-13

Figure 4

Pressure tester at connection “SP“

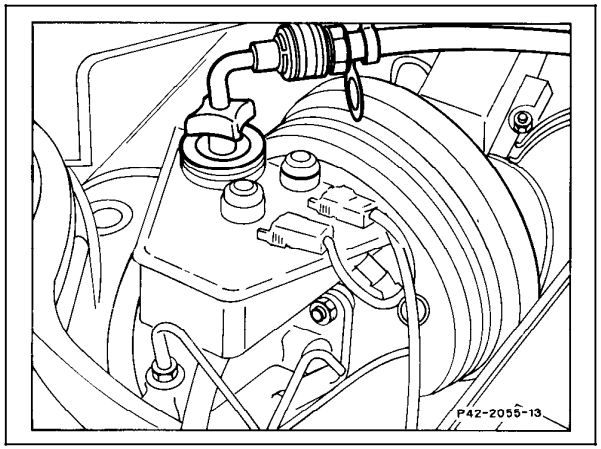

P42-2055-13

Figure 5

Connection of brake bleeder to brake fluid reservoir