Electrical Test Program - Test

Test step **DTC**	Test scope	Test connection	Test condition	Nominal value	Possible cause/Remedy
⇒ 1.0 28	**ABS/ASR control module (N30/1)** Voltage supply Circuit 87	N30/1 3 — V — 1 16 — V — 1	Ignition: **ON**	11 – 14 V	⇒ 1.1
⇒ 1.1	Voltage supply from overvoltage protection relay module (K1)	N30/1 W16/4 — V — 1	Ignition: **ON**	11 – 14 V	Fuse at K1, Wiring, K1, ⇒ 1.2
⇒ 1.2	Ground wire	N30/1 W16/4 — Ω — 3 W16/4 — Ω — 16	Ignition: **OFF**	< 1 Ω	Wiring, Ground, right component compartment (W16/4).
⇒ 2.0	**ABS MIL (A1e17)**	N30/1 3 — V — 24	Ignition: **ON** Engine: **at Idle**	< 2 V A1e17: **ON** 10 – 14 V A1e17: **OFF**	A1e17, ⇒ 2.1 12, Wiring, N30/1.

Electrical Test Program - Test

Test step **DTC**	Test scope	Test connection	Test condition	Nominal value	Possible cause/Remedy
⇒ 2.1	Diode in ABS/ASR hydraulic unit, solenoid valve relay (A7/3k1)	—	Ignition: **OFF** Disconnect N30/1. Ignition: **ON** Engine: **at Idle**	 A1e17: **ON** A1e17: **ON**	Wiring, A7/3k1.
⇒ 3.0	**ASR MIL (A1e22)**	N30/1 3 — V — 12	Ignition: **ON** Engine: **at Idle**	< 2 V A1e22: **ON** 10 – 14 V A1e22: **OFF**	A1e22, ⇒ 3.1 12, Wiring, N30/1.
⇒ 3.1	Diode in solenoid valve relay (A7/3k1)	—	Ignition: **OFF** Disconnect N30/1. Ignition: **ON** Engine: **at Idle**	 A1e22: **ON** A1e22: **ON**	Wiring, A7/3k1.

Electrical Test Program - Test

Test step **DTC**	Test scope	Test connection	Test condition	Nominal value	Possible cause/Remedy
⇒ 4.0	**ASR warning lamp (A1e21)**	N30/2 10 — V — 1	Ignition: **ON** Engine: **at Idle**	10 – 14 V A1e21: **ON** < 2 V A1e21: **OFF**	Wiring, A1e21. Wiring.
⇒ 5.0	**Diagnosis output**	N30/1 3 — V — 30	Ignition: **ON**	10 – 14 V	Wiring, N30/1.
⇒ 6.0	**Circuit 61 voltage**	N30/1 3 — V — 38	Ignition: **ON** Engine: **at Idle**	< 1 V 11 – 14 V	Wiring, Generator (G2).

Electrical Test Program - Test

Test step DTC	Test scope	Test connection	Test condition	Nominal value	Possible cause/Remedy
⇒ 7.0 12	**ABS/ASR hydraulic unit, solenoid valve relay (A7/3k1)** Voltage supply	N30/1 8 — V — 20	Ignition: **ON**	11 – 14 V	12, ⇒ 7.1, Wiring.
	Monitor	N30/1 3 — V — 5		11 – 14 V	⇒ 7.2, Wiring.
⇒ 7.1	Coil resistance	N30/1 8 — Ω — 20	Ignition: **OFF** Disconnect N30/1.	40 – 80 Ω	Wiring, A7/3k1.
⇒ 7.2	Working contact	N30/1 W14 — Ω — 17	Ignition: **OFF** Disconnect N30/1.	< 15 Ω	Wiring, A7/3k1.

Electrical Test Program - Test

Test step DTC	Test scope	Test connection	Test condition	Nominal value	Possible cause/Remedy
⇒ 8.0 24	**ABS/ASR hydraulic unit, cycling module/high pressure return pump relay (A7/3n1)** Voltage supply	N30/1 3 — V — 20	Ignition: **ON** Disconnect N30/1.	11 – 14 V	Wiring, A7/3n1.
⇒ 9.0 27	**Stop lamp switch (S9/1)** N.O. contact	N30/1 3 — V — 29	Ignition: **ON** Brake pedal not depressed. Depress brake pedal.	< 1 V 11 – 14 V	Wiring, F1/1-12, K1, S9/1.
	N.C. contact	N30/1 3 — V — 26	Brake pedal not depressed. Depress brake pedal.	11 – 14 V < 1 V	

Electrical Test Program - Test

Test step DTC	Test scope	Test connection	Test condition	Nominal value	Possible cause/Remedy
⇒ 10.0	**Parking brake switch (S12)**	N30/1 3 — 28	Ignition: **ON** Set parking brake. Engine: **at Idle** Release parking brake	A1e7: **ON** < 1 V A1e7: **OFF** 11 – 14 V	Wiring, A1e7.
⇒ 11.0 26	**ASR brake fluid level switch (S11/2)**	N30/1 3 — 27	Ignition: **ON** Brake fluid reservoir: Full Empty	< 3 V 11 – 14 V	Wiring, S11/2.
⇒ 12.0	**ASR snow chain switch (S76)**	N30/1 3 — 6	Engine: **at Idle** Press and hold switch S76 in **ON** position Press and hold switch S76 in **OFF** position	< 1 V S76 indicator: **ON** 11 – 14 V S76 indicator: **OFF**	Wiring, S76, N30/1.

Electrical Test Program - Test

Test step DTC	Test scope	Test connection	Test condition	Nominal value	Possible cause/Remedy
⇒ 13.0 E 7 1 1	**Left front axle VSS sensor (L6/1)**	N30/1 48 — V — 49	Raise front of vehicle. Ignition: **ON** Rotate left front wheel.	> 0.1 V ~	⇒ 13.1
⇒ 13.1	Internal resistance	N30/1 48 — Ω — 49	Ignition: **OFF** Disconnect N30/1.	0.8 – 3.7 kΩ	Wiring, L6/1, ⇒ 13.2
⇒ 13.2	Insulation resistance	N30/1 3 — Ω — 49	Ignition: **OFF** Disconnect N30/1.	> 20 kΩ	Wiring.
⇒ 14.0	**Left front axle VSS sensor (L6/1) output**	N30/1 3 — V — 18	Raise front of vehicle. Ignition: **ON** Rotate left front wheel.	> 3 V ~	Wiring, ⇒ 14.1, N30/1.
⇒ 14.1	Load with control modules connected.	N30/1 3 — Ω — 18	Ignition: **OFF** Disconnect N30/1.	> 5 kΩ	Wiring, Control modules (A1, N4/1, N22) connected. ⇒ 13.0

Electrical Test Program - Test

Test step DTC	Test scope	Test connection	Test condition	Nominal value	Possible cause/Remedy
⇒ 15.0 4 8 11	**Right front axle VSS sensor (L6/2)**	N30/1 46 — V — 47	Raise front of vehicle. Ignition: **ON** Rotate right front wheel.	> 0.1 V ~	⇒ 15.1, ⇒ 15.2.
⇒ 15.1	Internal resistance	N30/1 46 — Ω — 47	Ignition: **OFF** Disconnect N30/1.	0.8 – 3.7 k Ω	Wiring, L6/2.
⇒ 15.2	Insulation resistance	N30/1 3 — Ω — 47	Ignition: **OFF** Disconnect N30/1.	> 20 kΩ	Wiring.
⇒ 16.0	***Not for U.S.A vehicles***				

Electrical Test Program - Test

Test step DTC	Test scope	Test connection	Test condition	Nominal value	Possible cause/Remedy
⇒ 17.0 5 9 11	**Left rear axle VSS sensor (L6/3)**	N30/1 44 — V — 45	Raise rear of vehicle. Ignition: **ON** Rotate left rear wheel.	> 0.1 V ~	⇒ 17.1, ⇒ 17.2.
⇒ 17.1	Internal resistance	N30/1 44 — Ω — 45	Ignition: **OFF** Disconnect N30/1.	0.6 – 3.2 kΩ	Wiring, L6/3.
⇒ 17.2	Insulation resistance	N30/1 3 — Ω — 45	Ignition: **OFF** Disconnect N30/1.	> 20 kΩ	Wiring.
⇒ 18.0	**Left rear axle VSS sensor (L6/3) output**	N30/1 3 — V — 2	Raise rear of vehicle. Ignition: **ON** Rotate left rear wheel.	> 3 V ~	Wiring, ⇒ 18.1, N30/1.
⇒ 18.1	Load with control modules connected	N30/1 3 — Ω — 2	Ignition: **OFF** Disconnect N30/1.	> 5 kΩ	Wiring, Control modules (N3/4, N4/1) connected. ⇒ 17.0.

Electrical Test Program - Test

Test step DTC	Test scope	Test connection	Test condition	Nominal value	Possible cause/Remedy
⇒ 19.0 6 10 11	**Right rear axle VSS sensor (L6/4)**	N30/1 42 — V — 43	Raise rear of vehicle. Ignition: **ON** Rotate right rear wheel.	> 0.1 V ~	⇒ 19.1, ⇒ 19.2.
⇒ 19.1	Internal resistance	N30/1 42 — Ω — 43	Ignition: **OFF** Disconnect N30/1.	0.6 – 3.2 k Ω	Wiring, L6/4.
⇒ 19.2	Insulation resistance	N30/1 3 — Ω — 43	Ignition: **OFF** Disconnect N30/1.	> 20 k Ω	Wiring.
⇒ 20.0	***Not for U.S.A vehicles***				

Electrical Test Program - Test

Test step DTC	Test scope	Test connection	Test condition	Nominal value	Possible cause/Remedy
⇒ 21.0 13	**ABS/ASR hydraulic unit, left front axle solenoid valve (A7/3y6) (hold)** Internal resistance	N30/1 3 — Ω — 17	Ignition: **OFF** Disconnect N30/1.	5.4 – 12.6 Ω	Wiring, ABS/ASR hydraulic unit (A7/3).
⇒ 22.0 14	**ABS/ASR hydraulic unit, left front axle solenoid valve (A7/3y7) (release)** Internal resistance	N30/1 3 — Ω — 54	Ignition: **OFF** Disconnect N30/1.	2.8 – 6.6 Ω	Wiring, A7/3.
⇒ 23.0 15	**ABS/ASR hydraulic unit, right front axle solenoid valve (A7/3y8) (hold)** Internal resistance	N30/1 3 — Ω — 22	Ignition: **OFF** Disconnect N30/1.	5.4 – 12.6 Ω	Wiring, A7/3.
⇒ 24.0 16	**ABS/ASR hydraulic unit, right front axle solenoid valve (A7/3y9) (release)** Internal resistance	N30/1 3 — Ω — 41	Ignition: **OFF** Disconnect N30/1.	2.8 – 6.6 Ω	Wiring, A7/3.

Electrical Test Program - Test

Test step DTC	Test scope	Test connection	Test condition	Nominal value	Possible cause/Remedy
⇒ 25.0 17	**ABS/ASR hydraulic unit, left rear axle solenoid valve (A7/3y10) (hold)** Internal resistance	N30/1 3 — Ω — 4	Ignition: **OFF** Disconnect N30/1.	5.4 – 12.6 Ω	Wiring, A7/3.
⇒ 26.0 18	**ABS/ASR hydraulic unit, left rear axle solenoid valve (A7/3y11) (release)** Internal resistance	N30/1 3 — Ω — 40	Ignition: **OFF** Disconnect N30/1.	2.8 – 6.6 Ω	Wiring, A7/3.
⇒ 27.0 19	**ABS/ASR hydraulic unit, right rear axle solenoid valve (A7/3y12) (hold)** Internal resistance	N30/1 3 — Ω — 36	Ignition: **OFF** Disconnect N30/1.	5.4 – 12.6 Ω	Wiring, A7/3.
⇒ 28.0 20	**ABS/ASR hydraulic unit, right rear axle solenoid valve (A7/3y13) (release)** Internal resistance	N30/1 3 — Ω — 37	Ignition: **OFF** Disconnect N30/1.	2.8 – 6.6 Ω	Wiring, A7/3.

Electrical Test Program - Test

Test step DTC	Test scope	Test connection	Test condition	Nominal value	Possible cause/Remedy
⇒ 29.0 21	**ABS/ASR hydraulic unit, switchover/solenoid valve (A7/3y5)** Internal resistance	N30/1 3 — Ω — 23	Ignition: **OFF** Disconnect N30/1.	5.4 – 12.6 Ω	Wiring, A7/3.
⇒ 30.0 22	**ABS/ASR hydraulic unit, return solenoid valve (A7/3y14)** Internal resistance	N30/1 3 — Ω — 34	Ignition: **OFF** Disconnect N30/1.	5.4 – 12.6 Ω	Wiring, A7/3.
⇒ 31.0 25	**ASR charging pump relay module (K20)** Coil resistance	N30/1 9 — Ω — 1	Ignition: **OFF** Disconnect N30/1.	40 – 80 Ω	Wiring, K20.
⇒ 32.0 30 31 33	**CAN data bus**	N30/1 53 — Ω — 51	Ignition: **OFF** Disconnect connector from N30/1. Test with ohmmeter directly on connector.	55 – 65 Ω.	Data line, ⇒ 32.1

Electrical Test Program - Test

Test step **DTC**	Test scope	Test connection	Test condition	Nominal value	Possible cause/Remedy
⇒ 32.1	CAN element in engine control module (N3/4) Resistance	N3/4 L ◄–Ω+► H	Disconnect connector 1 from N3/4. Test directly on control module.	115 – 125 Ω.	N3/4, ⇒ 32.2
⇒ 32.2	CAN element in EA/CC/ISC control module (N4/1) Resistance	N4/1 20 ◄–Ω+► 21	Disconnect connector 1 from N4/1. Test directly on control module.	115 – 125 Ω.	N4/1.

Electrical Test Program - Test

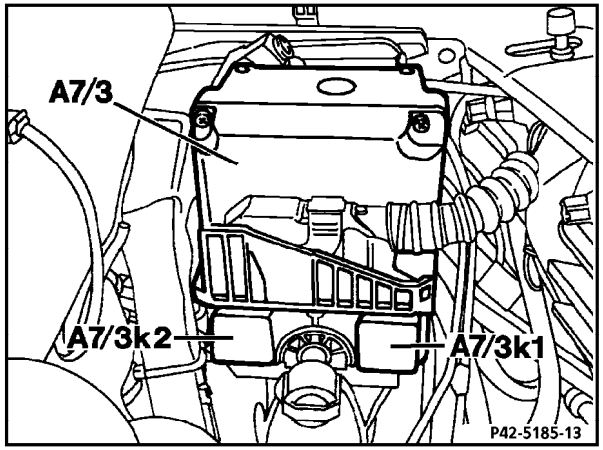

P42-5185-13

Figure 1

A7/3k1	Solenoid valve relay
A7/3k2	High-pressure/return pump relay

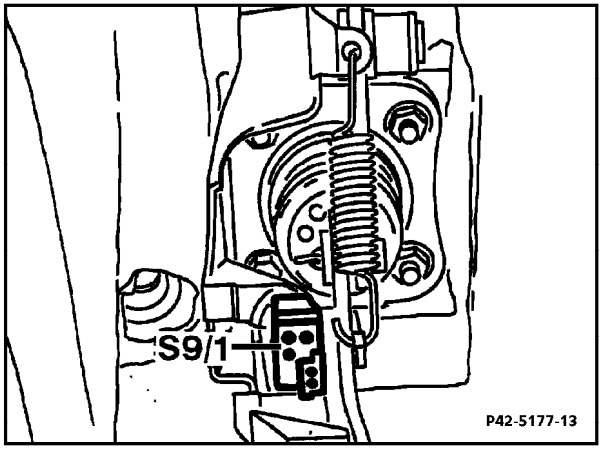

P42-5177-13

Figure 2

S9/1	Stop lamp switch (4-pole)

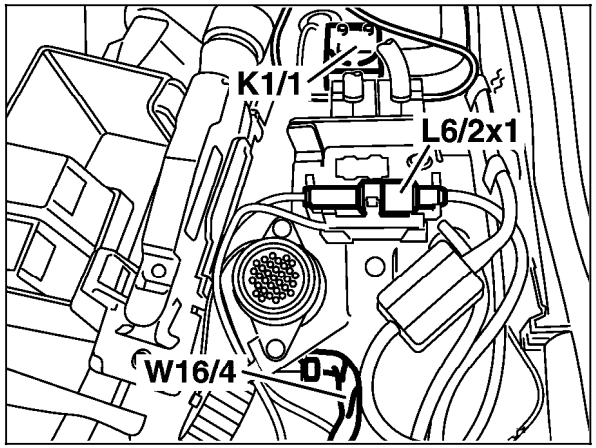

P42-5196-13

Figure 3

W16/4	Ground (output ground - component compartment - right)

Electrical Test Program - Test

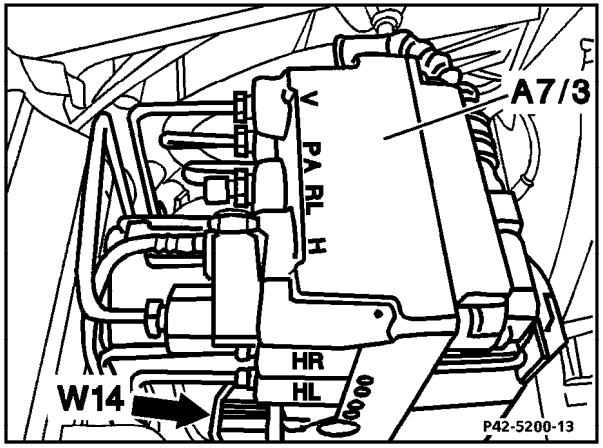

P42-5200-13

Figure 4

W14 Ground ABS hydraulic unit bracket)

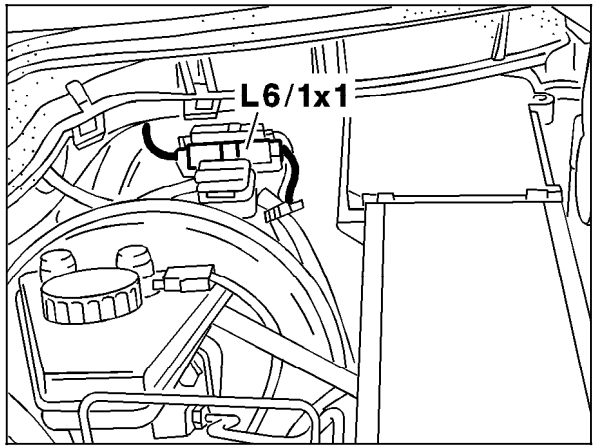

P42-5179-13

Figure 5

L6/1x1 Left front axle VSS sensor connector

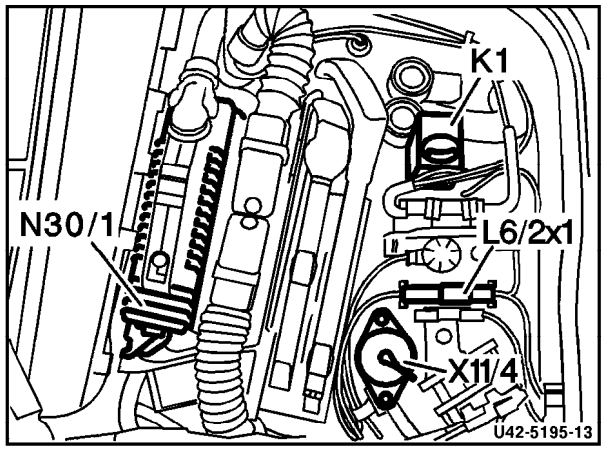

U42-5195-13

Figure 6

L6/2x1	Right front axle vehicle speed sensor harness connector
K1	Overvoltage protection relay module
N30/1	ABS/ASR control module

Electrical Test Program - Test

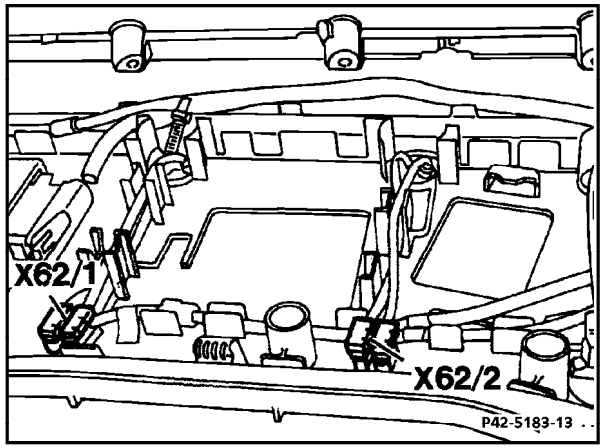

P42-5183-13

Figure 7

X62/1	Left rear axle VSS sensor/brake pad wear sensor connector
X62/2	Right rear axle VSS sensor/brake pad wear sensor connector

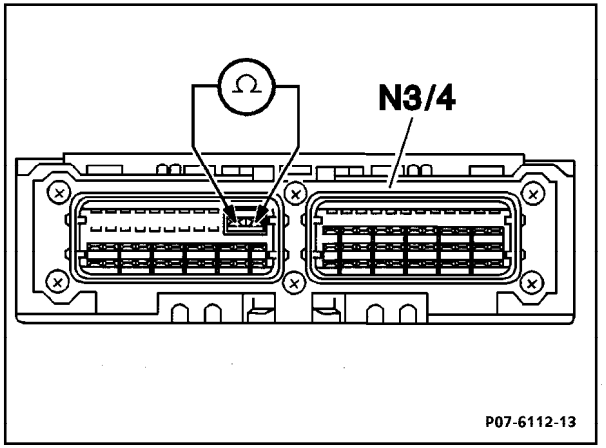

P07-6112-13

Figure 8

N3/4	Engine control module (HFM-SFI)

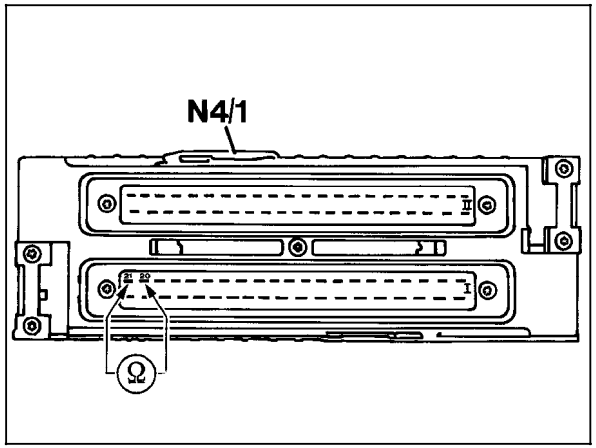

P07-6009-13

Figure 9

N4/1	EA/CC/ISC control module

Electrical Test Program - Test

ABS/ASR control module (N30/1) layout connector

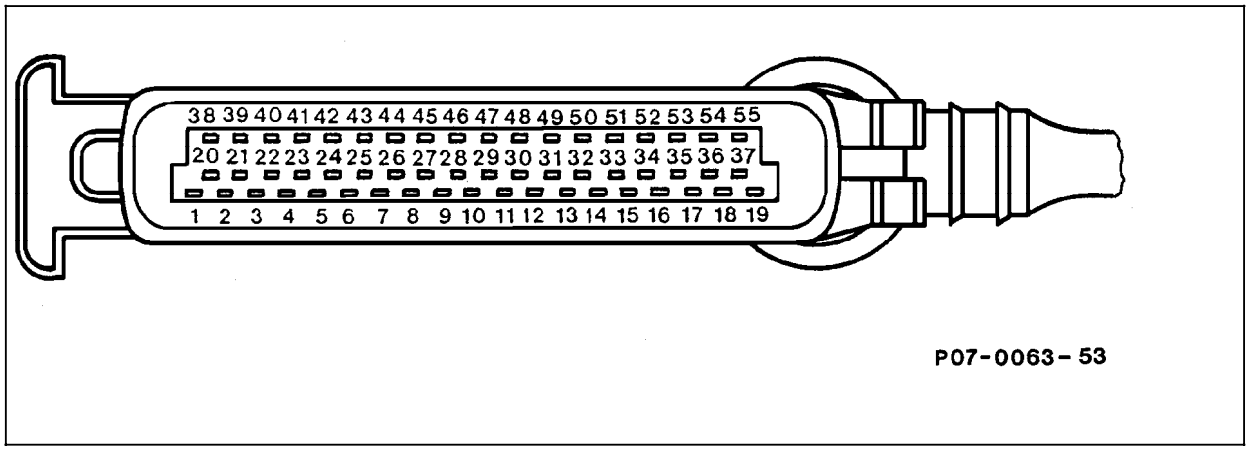

P07-0063-53

Figure 1

1 Circuit 87 voltage supply
2 Left rear axle VSS sensor (L6/3) output
3 Ground, right component compartment (W16/4)
4 ABS/ASR hydraulic unit, left rear axle solenoid valve (A7/3y10) (–)
5 ABS/ASR hydraulic unit, cycling module/high pressure return pump (A7/3n1), monitor
6 ASR snow chain switch (S76)
7 Not used
8 ABS/ASR hydraulic unit, solenoid valve relay (A7/3k1), control
9 ASR charging pump relay module (K20), control
10 ASR warning lamp (A1e21)
11 Not used
12 ASR MIL (A1e22)
13 ASR charging pump (M15)
14 ABS/ASR hydraulic unit, cycling module/high pressure return pump (A7/3n1), monitor
15 Not used
16 Ground, right component compartment (W16/4)
17 ABS/ASR hydraulic unit, left front axle solenoid valve (A7/3y6) (–)
18 Left front axle VSS sensor (L6/1) output
19 Not used
20 ABS/ASR hydraulic unit, cycling module/high pressure return pump (A7/3n1) and ABS/ASR hydraulic unit, solenoid valve relay (A7/3k1), voltage supply
21 Not used
22 ABS/ASR hydraulic unit, right front axle solenoid valve (A7/3y8) (–)
23 ABS/ASR hydraulic unit, switchover/solenoid valve (A7/3y5) (–)
24 ABS MIL (A1e17)
25 Not used
26 Stop lamp switch (S9/1), N.C. contact
27 ASR brake fluid level switch (S11/2)
28 Parking brake switch (S12)
29 Stop lamp switch (S9/1), N.O. contact
30 Diagnosis output
31-32 Not used
33 ASR snow chain switch (S76), function indicator lamp
34 ABS/ASR hydraulic unit, return solenoid valve (A7/3y14) (–)
35 Not used
36 ABS/ASR hydraulic unit, right rear axle solenoid valve (A7/3y12) (–)
37 ABS/ASR hydraulic unit, right rear axle solenoid valve (A7/3y13) (–)
38 Circuit 61 voltage
39 Not used
40 ABS/ASR hydraulic unit, left rear axle solenoid valve (A7/3y11) (–)
41 ABS/ASR hydraulic unit, righ front axle solenoid valve (A7/3y9) (–)
42 Right rear axle VSS sensor (L6/4) (–)
43 Right rear axle VSS sensor (L6/4) (+)
44 Left rear axle VSS sensor (L6/3) (–)
45 Left rear axle VSS sensor (L6/3) (+)
46 Right front axle VSS sensor (L6/2) (–)
47 Right front axle VSS sensor (L6/2) (+)
48 Left front axle VSS sensor (L6/1) (–)
49 Left front axle VSS sensor (L6/1) (+)
50 Not used
51 CAN-data line (H) (+)
52 Not used
53 CAN-data line (L) (–)
54 ABS/ASR hydraulic unit, left front axle solenoid valve (A7/3y7) (–)
55 Not used