Electrical Test Program - Preparation for Test

Preliminary work:
Diagnosis - Diagnostic Trouble Code (DTC) Memory 11

1. Review 11, 12, 22, 23, 31,
2. Ignition: **OFF**
3. Fuse on passenger-side fuse and relay module (K40/4) in order, Passenger-side fuse and relay module in order and connected.
4. Disconnect engine control module (IFI) (N3/7) connector.
5. Connect socket box with test cable to engine control module (IFI) (N3/7).

Electrical wiring diagrams :
Electrical Troubleshooting Manual, Model 210, Volume 1

Special Tools

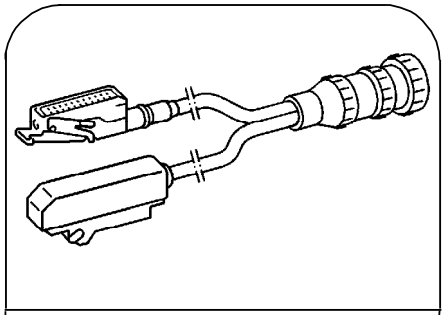

104 589 00 63 00

Test cable

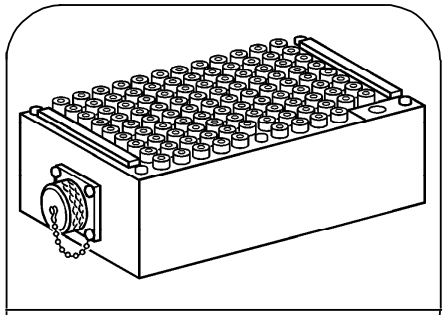

129 589 00 21 00

126-pin socket box

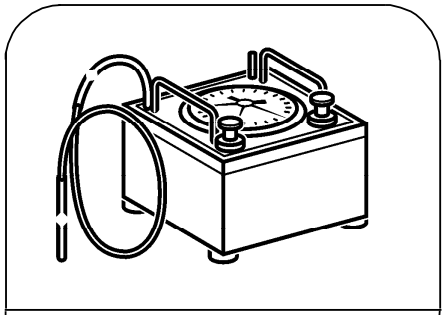

201 589 13 21 00

Tester

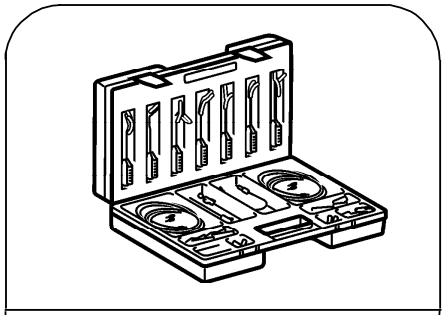

201 589 00 99 00

Electrical connecting set

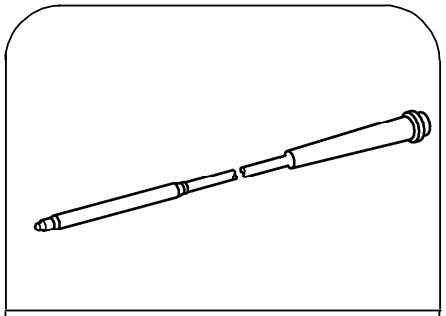

210 589 05 63 00

Adapter cable

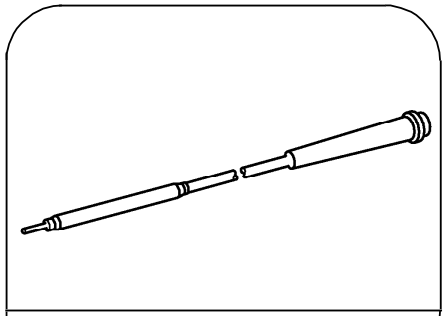

210 589 06 63 00

Adapter cable

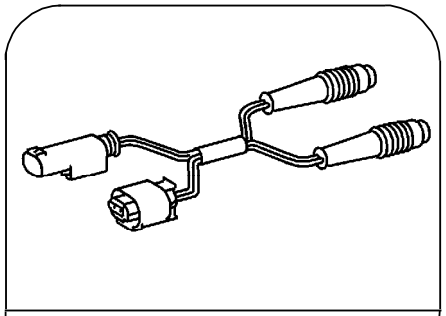

220 589 00 99 32

Adapter cable

Electrical Test Program - Preparation for Test

Test equipment; See MBUSA Standard Service Equipment Program

Description	Brand, model, etc.
Multimeter	Fluke models 23, 77 III, 83, 85, 87
Engine analyzer	Bear DACE Hermann Electronic
Y - fitting	117 078 01 45

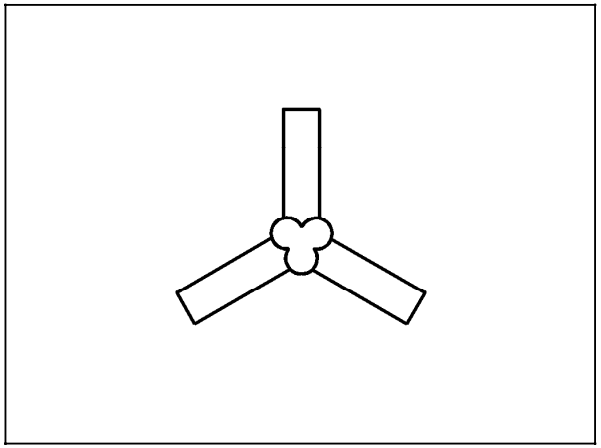

P07.12-0438-01

Figure 1

Y - fitting

Electrical Test Program – Preparation for Test

Connection Diagram – Socket box

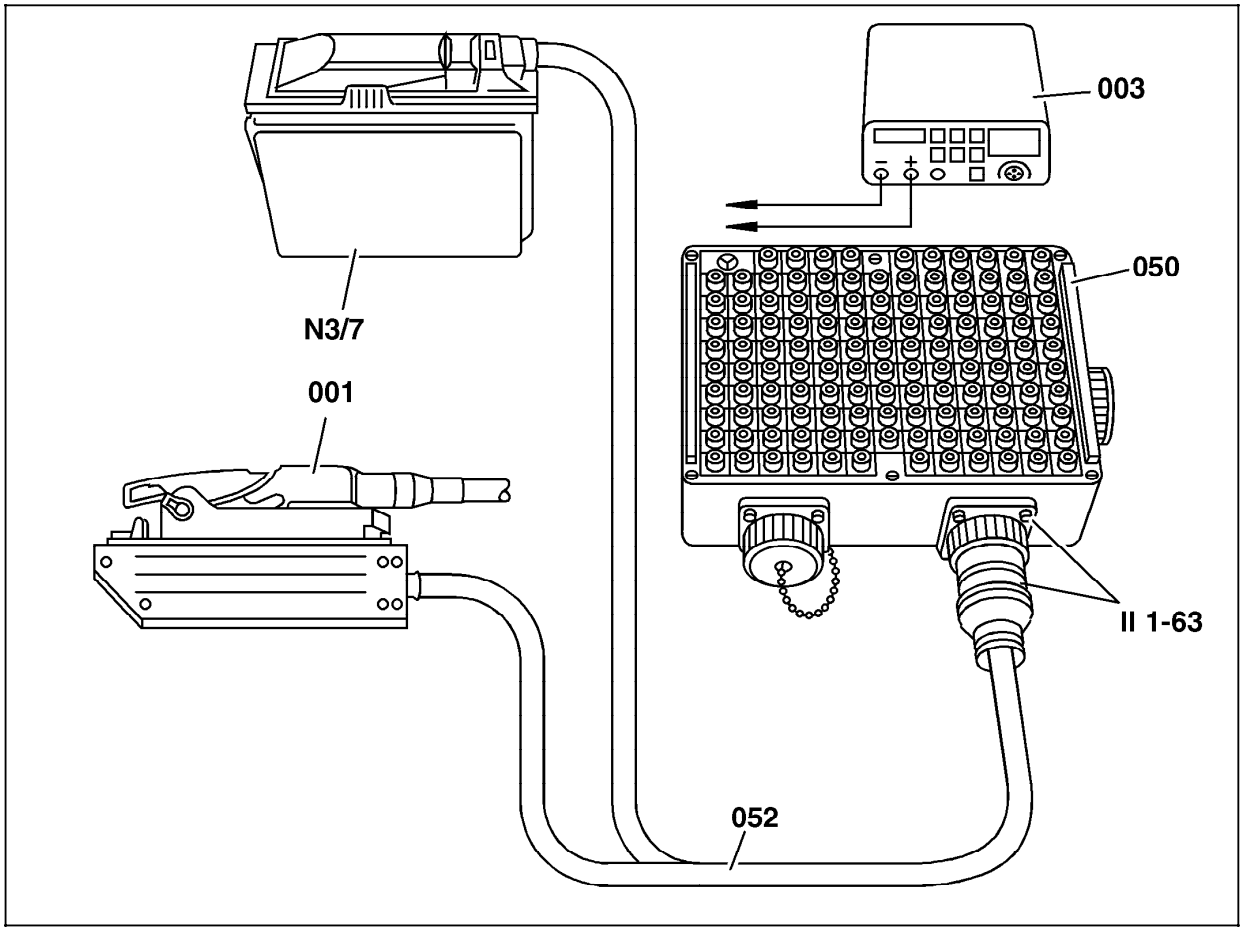

P07.12-0439-06

Figure 2

001	Engine control module (IFI) (N3/7) connector
003	Multimeter
050	Socket box (126-pole)
052	Test cable
N3/7	Engine control module (IFI)
II 1-63	Socket and plug of test cable

Electrical Test Program – Preparation for Test

Connector Layout - Engine Control Module (IFI) (N3/7)

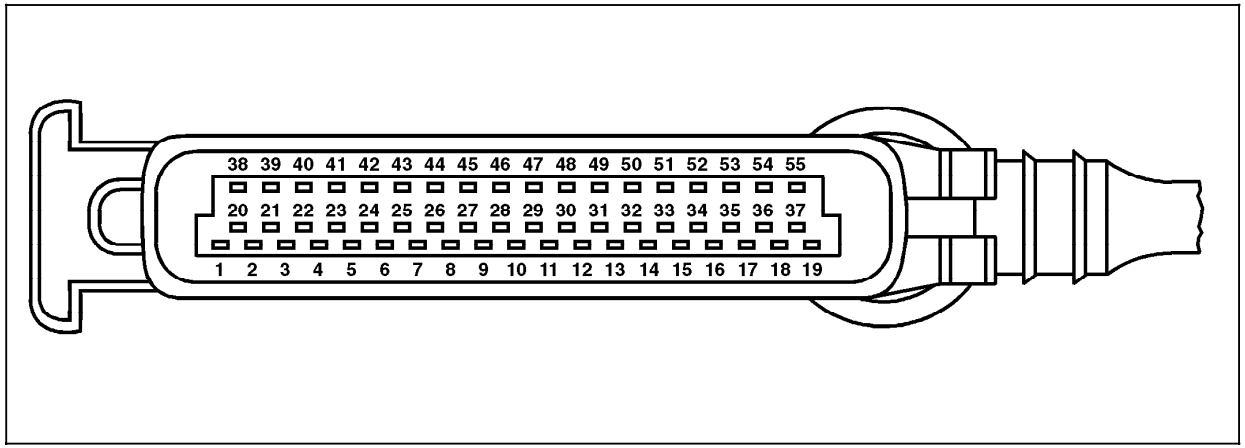

P07.12-0440-04

Figure 3

1	–
2	–
3	Fuel temperature sensor (Y1/1b1) in electrohydraulic shut off actuator, socket 4
4	Sensor ground GND
5	CAN data bus (socket L)
6	IFI/DFI accelerator pedal position sensor (R25/2) pressure sensor (socket 6), pressure sensor (B28) (socket 2)
7	Oil level switch (S43)
8	CC switch (S40) (accelerate/set, socket 4)
9	Fuel rack position sensor ([Y23/1I1] socket 7)
10	Fuel rack position sensor ([Y23/1I1] socket 1)
11	–
12	–
13	Terminal 50
14	TN-signal
15	IFI/DFI accelerator pedal position sensor ([R25/2] CTP switch, socket 4)
16	–
17	Starter relay (K40/4k2) (Model 210)
18	Ground W15 (electronics outut ground - right footwell)
19	Ground W15 (electronics outut ground - right footwell)
20	CKP sensor (L5/6)
21	Hot film MAF sensor ([B2/5] socket 5)
22	Pressure sensor ([B28] socket 1)
23	ECT sensor ([B11] socket 2)
24	IFI/DFI accelerator pedal position sensor ([R25/2] CTP switch, socket 3)
25	–
26	Terminal HRL from relay module K40 (connector E, socket 3)
27	P/N signal from transmission control module (N15/3)
28	CKP sensor (L5/6) ground
29	IFI/DFI accelerator pedal position sensor ([R25/2] potentiometer socket 1)
30	CC switch ([S40s5] control contact, socket 6)

Electrical Test Program – Preparation for Test

Connector Layout - IFI Control Module (N3/7)

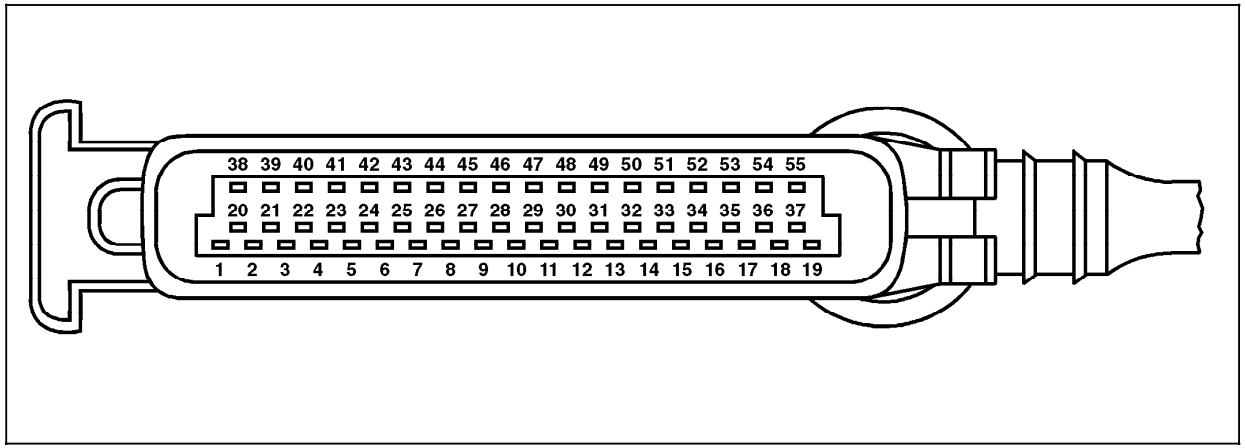

P07.12-0440-04

Figure 4

31	Cruise control switch (S40)
32	–
33	Preglow control module ([N14/2] connector 1, socket 2)
34	–
35	EGR valve vacuum transducer ([Y31/1] socket 1)
36	Fuel quantity actuator ([Y23/1] socket 2)
37	Voltage supply, circuit 87UG, unfused (relay module K40 [base function], connector E, socket 5)
38	CC switch ([S40s2] decelerate/set, socket 3)
39	IFI/DFI accelerator pedal position sensor ([R25/2] potentiometer, socket 5)
40	IAT sensor ([B17] socket 2)
41	CAN data bus (socket H)
42	CC switch ([S40s1] resume, socket 5)
43	IFI electrohydraulic shut-off actuator ([Y1/1] socket 3)
44	CC switch ([S40s4] off, socket 1)
45	Pressure sensor ([B28] socket 3)
46	Fuel rack position sensor ([Y23/1I1] socket 6)
47	Circuit 15E
48	–
49	–
50	Diagnostic signal (to X11/4, socket 4)
51	–
52	Pressure control flap vacuum transducer ([Y31/2] socket 1)
53	Boost pressure control/pressure control flap vacuum transducer ([Y31/5] socket 1)
54	IFI injection pump ([Y23/1] socket 2)
55	Voltage supply, circuit 87UG, unfused (relay module K40 [base function], connector E, socket 7)