Electrical Test Program - Preparation for Test

Preliminary work: Diagnosis – Diagnostic Trouble Code (DTC) Readout 11

1. Ignition: **OFF**
2. Remove CC/ISC control module (N4/3).
3. Connect socket box (see connection diagram, Figure 1 to 3)

Electrical wiring diagrams :
Electrical Troubleshooting Manual, Model 124
Electrical Troubleshooting Manual, Model 140

Special Tools

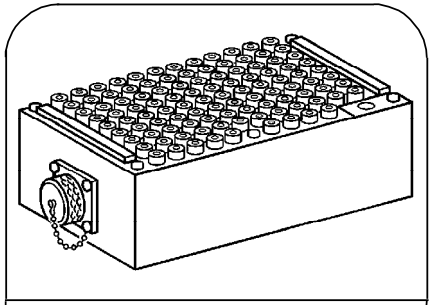

129 589 00 21 00

126-pin socket box

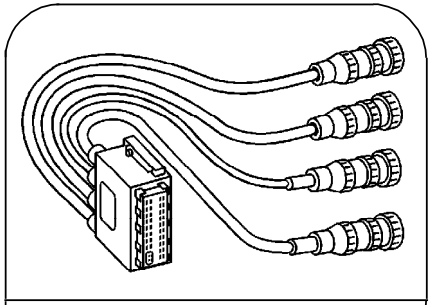

140 589 02 63 00

Contacting module 2

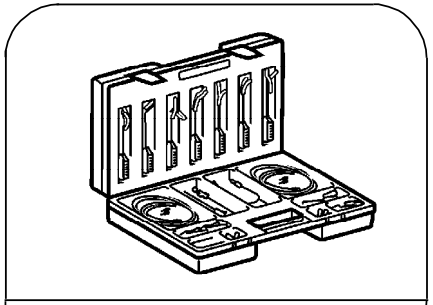

201 589 00 99 00

Electrical connecting set

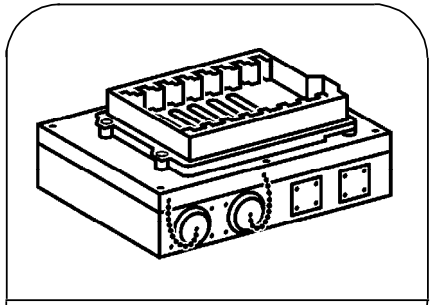

140 589 06 63 00

Contacting box

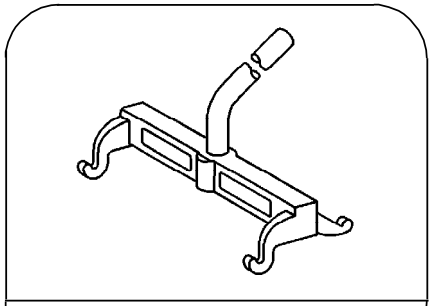

140 589 01 33 00

Mounting lever

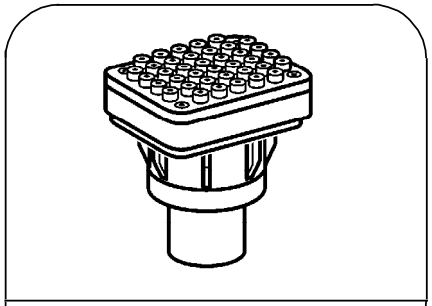

140 589 14 63 00

Adapter

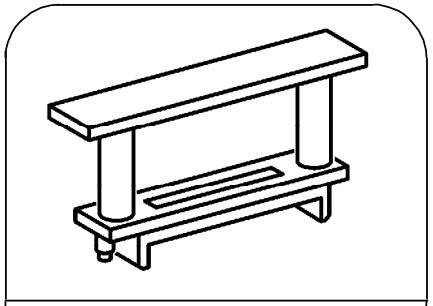

140 589 10 33 00

Spacer

Equipment

Digital multimeter [1]	Fluke models 23, 83, 85, 87
Signal generator [1] [2]	Sun DTR 8416

[1] Available through the MBUSA Standard Equipment Program.

[2] ⚠ Two signal generators and two multimeters are required for testing the potentiometer and cruise control.

Electrical Test Program - Preparation for Test

Connection Diagram – Socket Box
Engine 119, Model 124.034

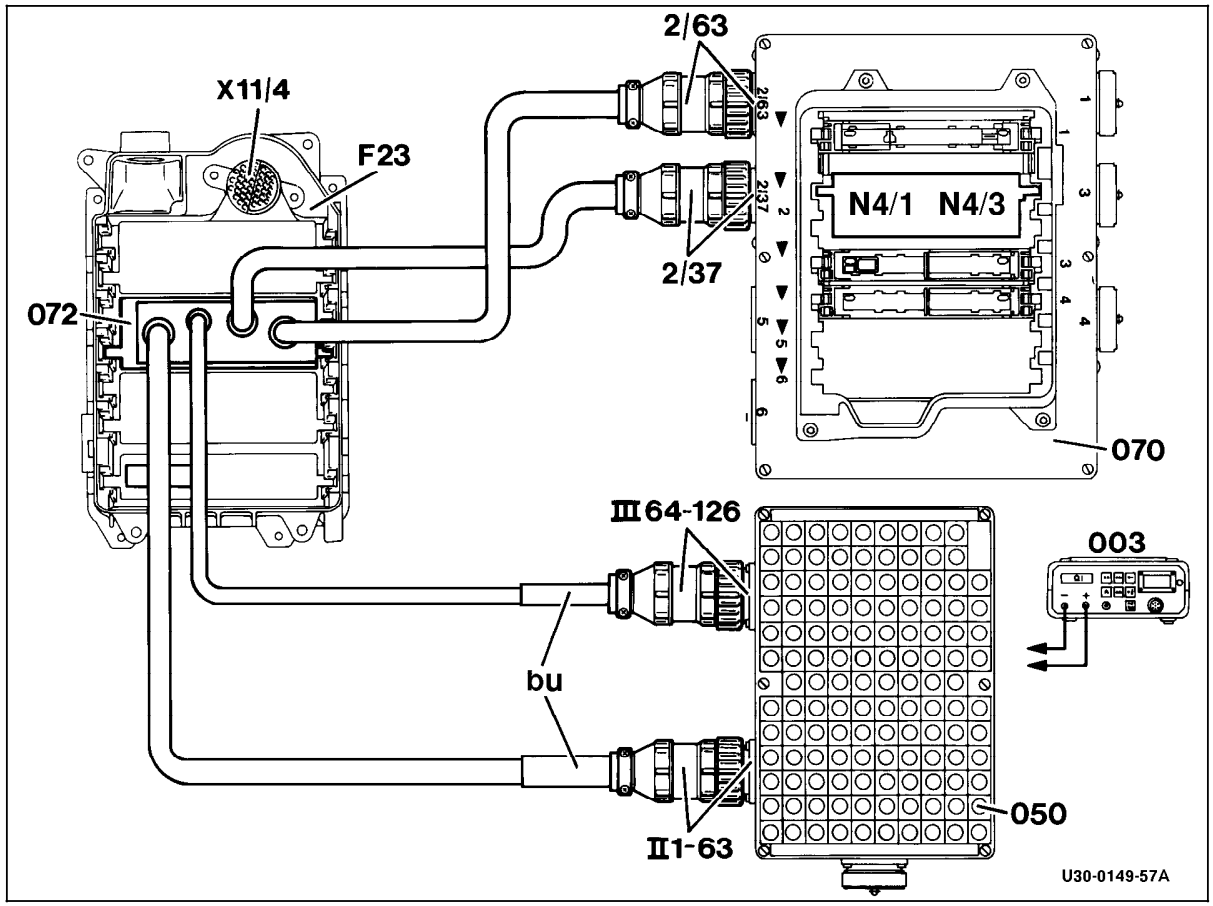

U30-0149-57A

Figure 1

F23	Module box
N4/3	CC/ISC control module
X11/4	Data link connector (DTC readout) (38-pole)
003	Digital multimeter
050	Socket box (126-pole)
070	Contact box
072	Contact module 2
bu	blue

Electrical Test Program - Preparation for Test

Connection Diagram – Socket Box
Engine 119, Model 129

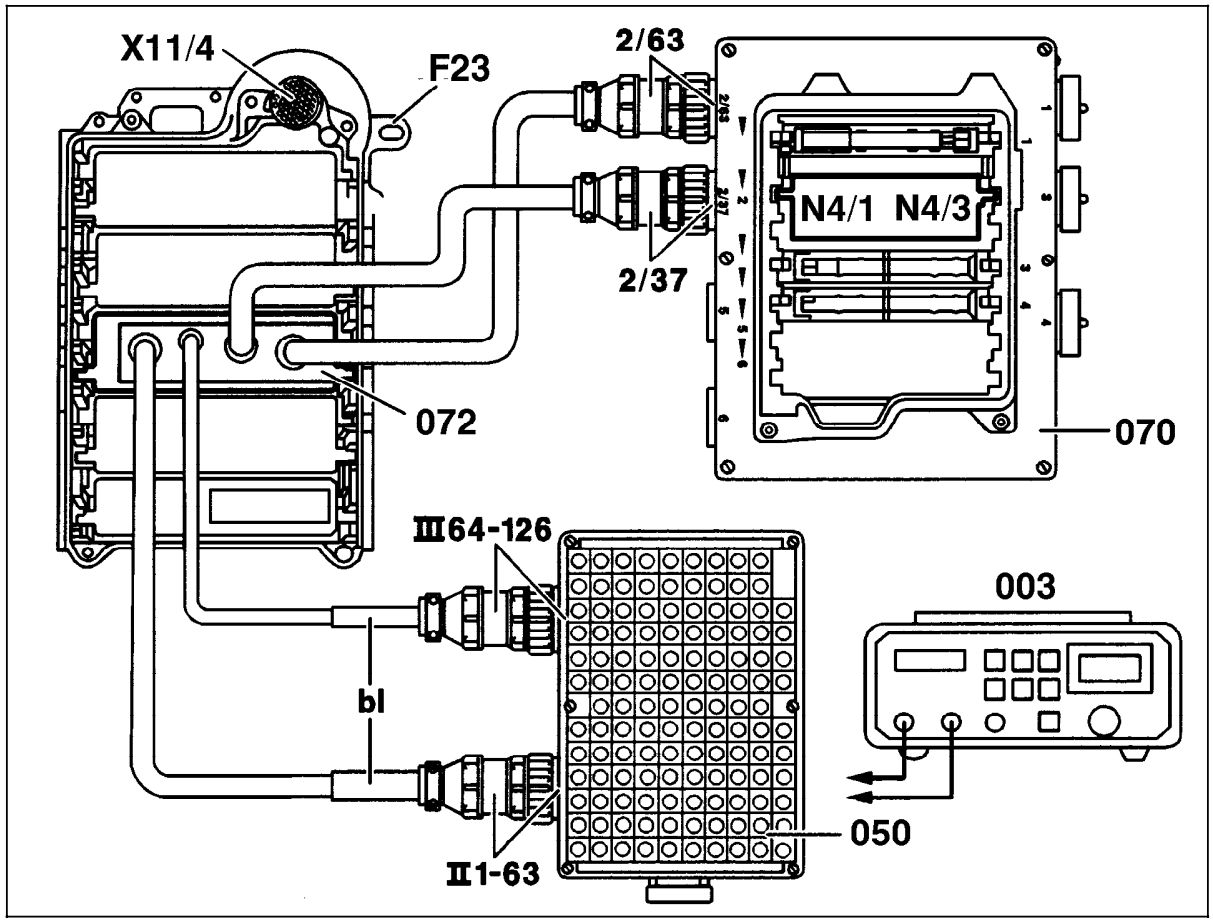

P30-5300-57

Figure 2

F23	Module box
N4/3	CC/ISC control module
X11/4	Data link connector (DTC readout) (38-pole)
003	Digital multimeter
050	Socket box (126-pole)
070	Contact box
072	Contact module 2
bl	blue

Electrical Test Program - Preparation for Test

Connection Diagram – Socket Box
Engine 104, 119, Model 140

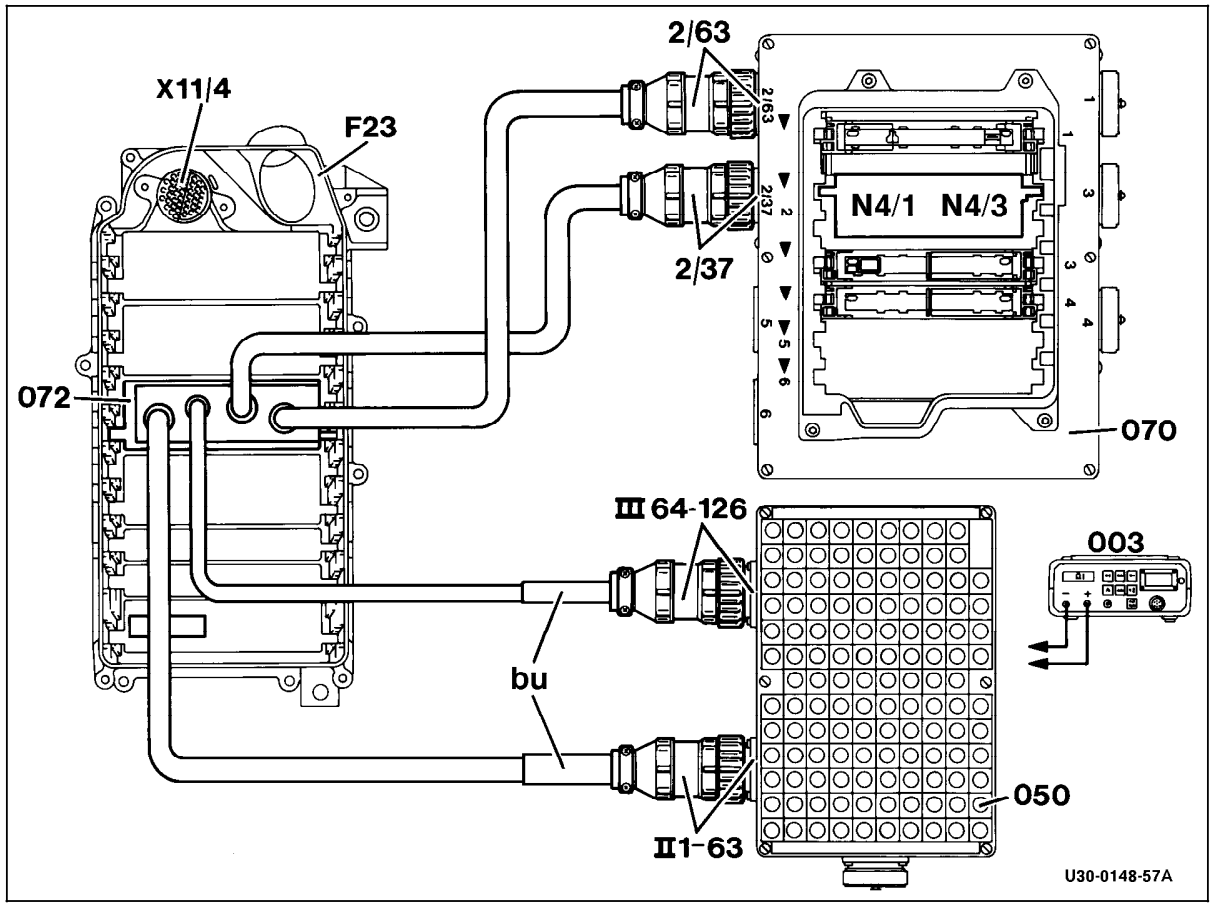

U30-0148-57A

Figure 3

F23	Module box
N4/3	CC/ISC control module
X11/4	Data link connector (DTC readout) (38-pole)
003	Digital multimeter
050	Socket box (126-pole)
070	Contact box
072	Contact module 2
bl	blue

Electrical Test Program - Preparation for Test

Layout of Cruise Control/Idle Speed Control Module Connector "1"

Figure 4

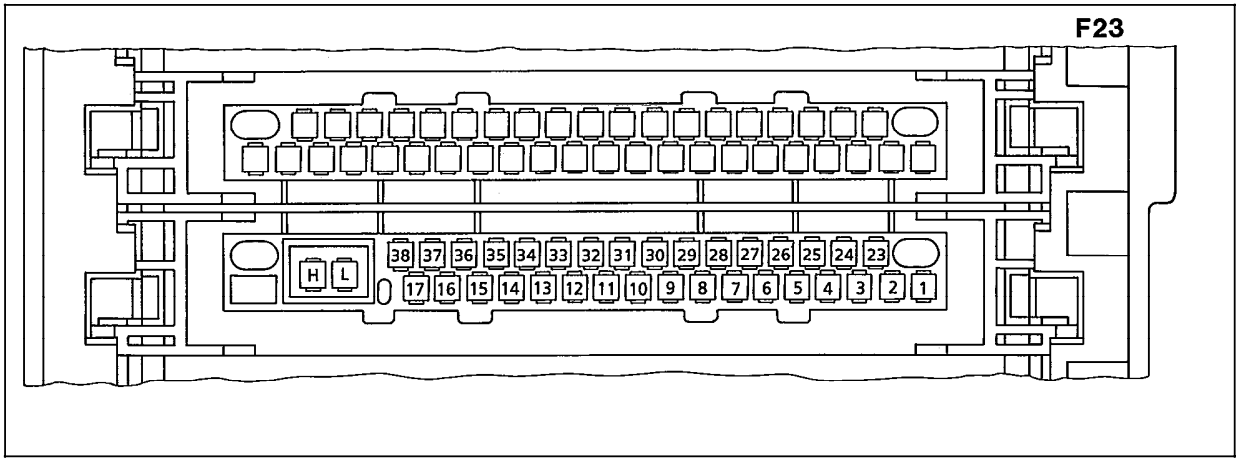

P07-5171-53

1	Not used
2	Cruise control switch (control switch contact)
3	Starter lock-out/backup lamp switch, "D" recognition
4	Starter lock-out/backup lamp switch, "D" recognition
5	Data link connector (DTC readout), 38-pole
6	Not used
7	Fuel safety shut-off (LH-SFI control module signal)
8 – 9	Not used
10	Cruise control switch (SET, DECEL.)
11	Cruise control switch (SET, DECEL.)
12	Rear axle speed sensor, ABS control module
13	Brake lamp switch (ground)
14	Not used
15	Left front wheel speed sensor, ABS control module
16	A/C compressor input signal (base module)
17	Do not contact!
18 – 23	Not used
24	Closed throttle position recognition (LH-SFI control module)
25 – 29	Not used
30	Brake lamp switch
31	Cruise control switch (SET, RESUME)
32	Diode matrix, idle speed increase (only model 140 with engine 119)
33	Cruise control switch
34	Engine speed signal (base module)
35	Voltage supply, unfused circuit 87 Ug (base module)
36	Voltage supply, unfused circuit 87 Ug (base module)
37	Model 140: Ground W15, output ground, electronics (right footwell) Model 124: Ground W16, component compartment
38	Model 140: Ground W15, output ground, electronics (right footwell) Model 124: Ground W16, component compartment
"L"	Data line (–) Controller Area Network
"H"	Data line (+) Controller Area Network

Electrical Test Program - Preparation for Test

Layout of Cruise Control/Idle Speed Control Module Connector "2"

Figure 5

1 – 7	Not used
8	CC/ISC actuator (drive actual value potentiometer signal)
9	CC/ISC actuator (throttle valve actual value potentiometer signal)
10	CC/ISC actuator (potentiometer ground)
11	Do not contact!
12	CC/ISC actuator (voltage supply, drive and throttle valve actual value potentiometer)
13 – 15	Not used
16	CC/ISC actuator (voltage supply, safety contact and closed throttle position switch)
17 – 18	Not used
19	CC/ISC actuator (magnetic clutch ground)
20	CC/ISC actuator (motor voltage supply)
21	CC/ISC actuator (motor ground)
22	CC/ISC actuator (motor ground)
23 – 34	Not used
35	CC/ISC actuator (closed throttle position contact signal)
36 – 37	Not used
38	CC/ISC actuator (safety contact)
39	Not used
40	CC/ISC actuator (voltage supply)
41	CC/ISC actuator (voltage supply)

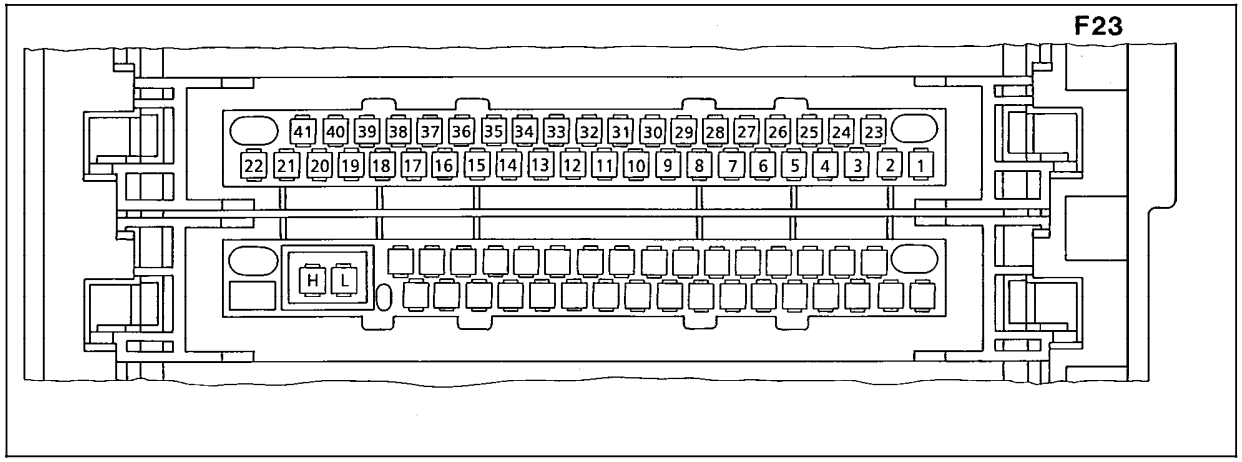

P07-5170-53