Electrical Test Program - Component Locations

Model 140

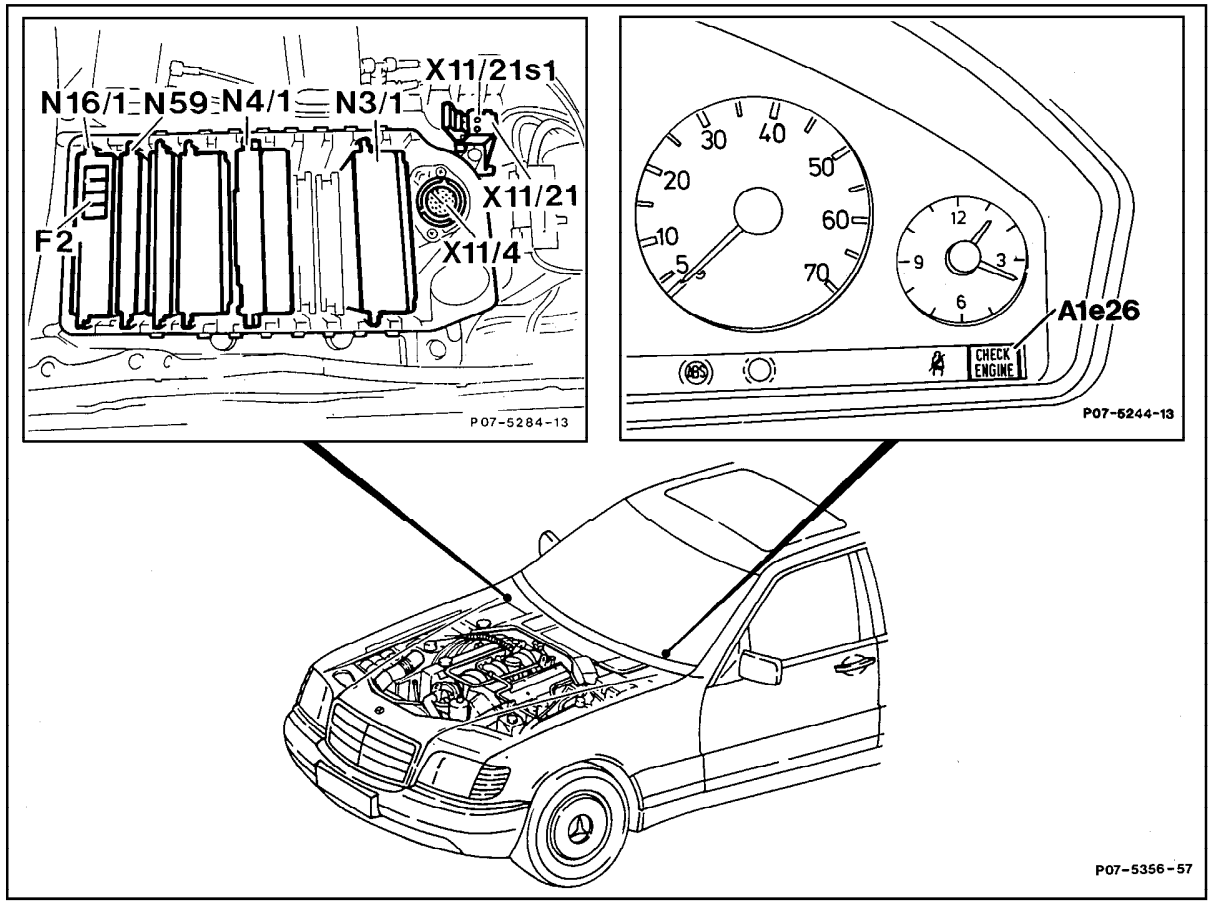

P07-5356-57

Figure 1

A1e26	"CHECK ENGINE" malfunction indicator lamp
F2	Maxi-fuse box (6-fuse, in fuse and relay box F1)
N3/1	LH-SFI control module
N4/1	Electronic accelerator/cruise control/idle speed control module
N16/1	Base module
N30/1	ABS/ASR control module
N59	Diagnostic module
X11/4	Diagnostic connector (diagnostic trouble code, 38-pole)
X11/21	Diagnostic module test connection (3-pole)
X11/21s1	Pushbutton (with LED) - California