Electrical Test Program - Preparation for Test

1. Ignition: **OFF**
2. Remove diagnostic module (OBD II, N59/1).
3. Connect socket box with test cable according to connection diagram.

Electrical wiring diagrams :
Electrical Troubleshooting Manual, Model 129
Electrical Troubleshooting Manual, Model 202.

Special Tools

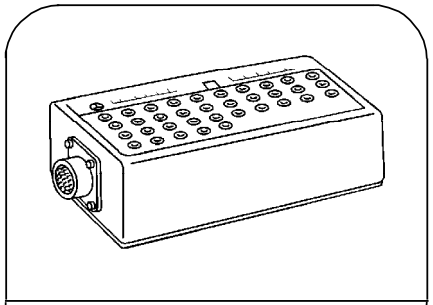

124 589 00 21 00

35-pin socket box

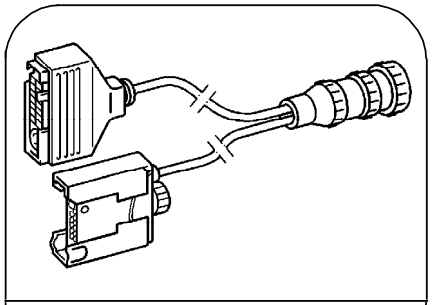

124 589 43 63 00

22-pin test cable

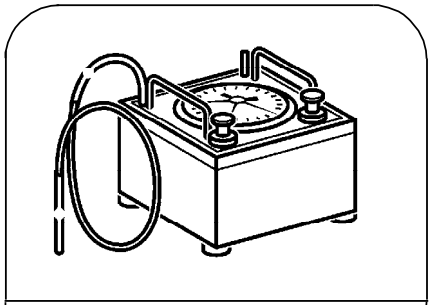

201 589 13 21 00

Tester

Conventional tools, test equipment

Description	Brand, model, etc.
Multimeter [1]	Fluke models 23, 83, 85, 87
Test and adjustment diagnostic equipment (oscilloscope) [1]	BEAR DACE

[1] Available through the MBUSA Standard Equipment Program.

Electrical Test Program – Component Locations

Connection Diagram – Socket Box
Model 129 to end of Model Year 1995,
starting Model Year 1996 see section 8.6

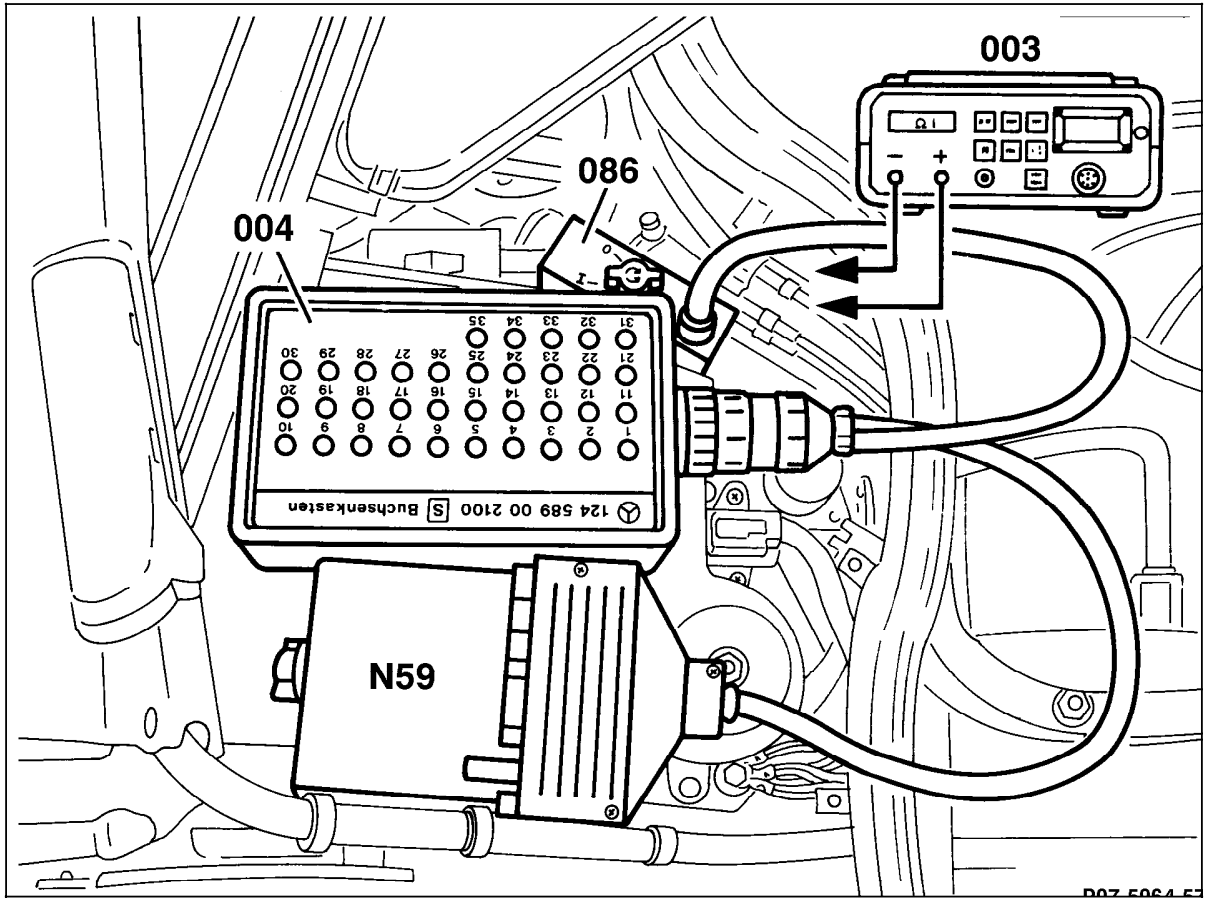

Figure 1

003	Digital multimeter
004	Socket box (35-pole)
086	Test cable
N59/1	Diagnostic module (OBD II)

Electrical Test Program – Component Locations

Connection Diagram – Socket Box
Model 202

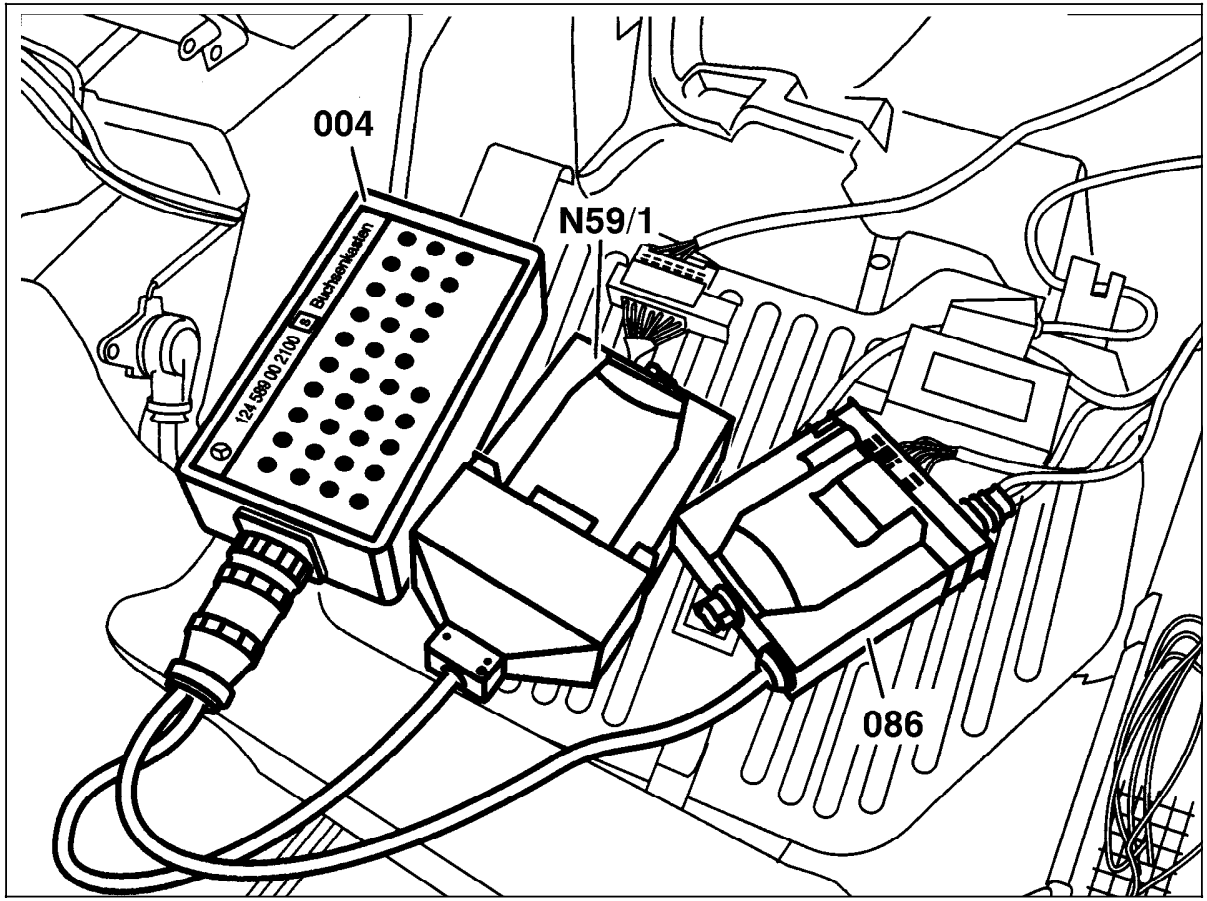

P07-6229-57

Figure 2

003	Digital multimeter
004	Socket box (35-pole)
086	Test cable
N59/1	Diagnostic module (OBD II)

Electrical Test Program – Preparation for Test

Terminal Layout of Diagnostic Module Models 129 to end of Model Year 1995, Model 202

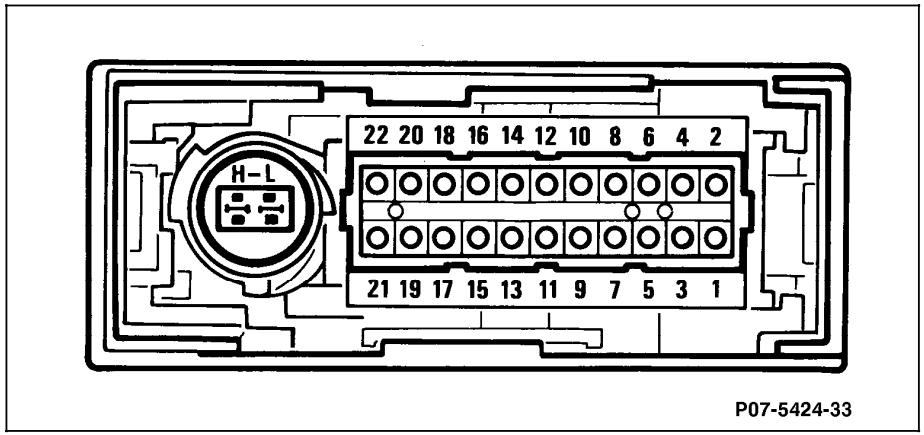

P07-5424-33

Figure 3

1	Sensor ground
2	Ground **Model 129:** Module box bracket (W27) **Model 202:** Component compartment (W16/4)
3	Voltage supply, circuit 87
4	Voltage supply, circuit 30
5	–
6	Data link connector (X11/4, 38-pole)
7	Diagnostic module coding (Engine 104 only)
8	Diagnostic module coding (Model 129 only)
9	CHECK ENGINE MIL
10	–
11	O2S 2 (after TWC) signal
12	Purge flow switchover valve
13	–
14	O2S 1 (before TWC) signal
15	Ground from Engine control module (N3/4)
16	–
17	Diagnostic wire to generic scan tool connector (X11/22, 16-pole)
18	DM pressure sensor (B5/2)
19	Engine speed signal (TNA)
20	CMP sensor signal
21	–
22	DM pressure sensor (B5/2)
H	CAN Data line (+) (Engine control module, EA/CC/ISC control module)
L	CAN Data line (–) (Engine control module, EA/CC/ISC control module)