Electrical Test Program – Test

⇒		Test scope	Test connection	Test condition	Nominal value	Possible cause/Remedy
1.0	P1750	**Diagnostic module (OBD II, N59/1)** Voltage supply Circuit 30	N59/1 2 (1.2) — V — 4 (1.4)	Ignition: **ON**	11 – 14 V	Wiring, ⇒ 1.1, **Model 129** Base module (N161/1) **Model 202** Fuse (F1-32).
1.1		Ground wire	N59/1 — X11/4 2 (1.2) — V — 3	Ignition: **ON**	11 – 14 V	Wiring, **Model 129** Ground (module box bracket, W27, Figure 1) **Model 202** Ground (component compartment, W16/4, Figure 2)
2.0		**Diagnostic module (OBD II, N59/1)** Voltage supply Circuit 87E	N59/1 15 (1.15) — V — 3 (1.3)	Ignition: **ON**	11 – 14 V	Wiring, ⇒ 2.1, **Model 129** Base module (N161/1) **Model 202** Overvoltage protection relay module (K1/2)
2.1		Ground wire to engine control module	N59/1 15 (1.15) — V — 4 (1.4)	Ignition: **ON**	11 – 14 V	Wiring

Electrical Test Program – Test

⇒		Test scope	Test connection	Test condition	Nominal value	Possible cause/Remedy
3.0		**"CHECK ENGINE" MIL (A1e26)** Control	N59/1 9 (1.9) — V — 3 (1.3)	Ignition: **ON**	11 – 14 V	Diagnostic module (OBD II, N59/1)
4.0	P0132 P0134 P0131 P1131 P0133	**O2S 1 (before TWC) (G3/2)** Signal	N59/1 2 (1.2) — V — 14 (1.14)	Engine: **at Idle** and at operating temperature (80 °C). Run engine at idle for at least 2 minutes.	oscillates between -0.2V and +1.0 V, by more than 0.3 V.	Wiring, G3/2.
5.0	P0138 P1137 P1138	**O2S 2 (after TWC) (G3/1)** Signal	N59/1 2 (1.2) — V — 11 (1.11)	Start engine at engine coolant temperature > 80ºC. Maintain an engine speed of 2000 – 3000 rpm for approx. 3 minutes until O2S 2 (after TWC) heater is switched on (see HHT). Accelerate briefly	450 mV constant Voltage changes Voltage changes by > 100 mV	Wiring, G3/1.

Electrical Test Program – Test

⇒		Test scope	Test connection	Test condition	Nominal value	Possible cause/Remedy
6.0	P1335	**Engine speed signal** TNA	N59/1 [1] 2 (1.2) — 19 (1.19) N59/1 [2] 2 (1.2) — 19 (1.19)	Engine: **at Idle**	Signal (Fig. 3) 5.0 – 7.5 V	Wiring, Engine control module (N3/4).
7.0	P1340	**CMP sensor (L5/1)** Output signal	N59/1 [1] 2 (1.2) — 20 (1.20) N59/1 [2] 2 (1.2) — 20 (1.20)	Engine: **at Idle**	Signal (Fig. 4) 9.5 – 11.0 V (voltage jumps)	Wiring, CMP sensor (L5/1), Engine control module (N3/4).

[1] Test with oscilloscope.
[2] Test with digital multimeter only if oscilloscope is not available.

Electrical Test Program – Test

⇒		Test scope	Test connection	Test condition	Nominal value	Possible cause/Remedy
8.0	P1443	**Purge flow switchover valve (Y27/6)** Current draw	N59/1 2 (1.2) — A — 12 (1.12)	Ignition: **ON**	0.4 – 0.6 A	Wiring, Y27/6.
9.0	P0441	**Purge flow system** Logic chain	N59/1 2 (1.2) — 12 (1.12)	Connect vacuum tester to switchover valve (Y27/6) (Figure 5) Engine: **Start** and bring to operating temperature (80 °C). Engine speed approximately 2500 rpm	Purge switchover valve (Y58/1) noticeably cycles. Vacuum tester needle oscillates by approx. 5 mbar vacuum with cycle frequency of the purge control valve (Y58/1)	Regeneration line, Purge control valve (Y58/1), Y27/6.

Electrical Test Program – Test

⇒		Test scope	Test connection	Test condition	Nominal value	Possible cause/Remedy
10.0	P1444	**Purge flow switchover valve (Y27/6)** Logic chain vacuum switchover	N59/1 2 (1.2) — 12 (1.12)	Connect vacuum tester to switchover valve (Y27/6). Disconnect 2-pole connector from purge control valve (Y58/1). Engine: **at Idle** Remove bridge from socket box tester	approx. 0 mbar vacuum > 500 mbar vacuum	Vacuum line, Y27/6).
11.0	P0105	**DM pressure sensor (B5/2)** Voltage	N59/1 1 (1.1) — 18 (1.18)	Connect vacuum tester to pressure sensor (B5/2) using Y-fitting (Figure 5). Ignition: **ON** Engine: **at Idle**	> 3.5 V < 2 V and vacuum increase to > 500 mbar	Vacuum line, Wiring, ⇒ 11.1, B5/2.
11.1		DM pressure sensor (B5/2) Voltage supply	N59/1 1 (1.1) — 22 (1.22)	Ignition: **ON**	4.7 – 5.3 V	Diagnostic module (OBD II, N59/1)

Electrical Test Program – Test

⇒		Test scope	Test connection	Test condition	Nominal value	Possible cause/Remedy
12.0		**Diagnostic module coding** **Model 129**	N59/1 7 (1.7) — V — 3 (1.3) 8 (1.8) — V — 3 (1.3) N59/1 7 (1.7) — V — 3 (1.3)	Ignition: **ON**	11 – 14 V	Wiring.
		Model 202 (Engine 104 only)				
13.0	P0600	**CAN databus**	N59/1 L — Ω — H	Ignition: **OFF** Disconnect test cable or diagnostic module. Test with ohmmeter directly on both connections of diagnostic module connector (Figure 6).	55 – 65 Ω	Data bus, ⇒ 13.1, Diagnostic module (OBD II, N59/1).

Electrical Test Program – Test

⇒		Test scope	Test connection	Test condition	Nominal value	Possible cause/Remedy
13.1		CAN segment in engine control module (N3/4)	N3/4 L ⊟ ◄–Ω+► ⊟ H	**Model 129** Remove control module (N3/4) **Model 202** Disconnect connector 1 from control module (N3/4) and test with ohmmeter directly on control module (Figure 7 and 8)	**Models 129, 202** (with Engine 104) 115 – 125 Ω **Model 202** (with Engine 111) 55 – 65 Ω	Engine control module (N3/4), ⇒ 13.2.
13.2		**On engine 104 to end of Model Year 1995** CAN segement in EA/CC/ISC control module (N4/1) or CC/ISC control module (N4/3) **On engine 104/111 as of Model Year 1996** CAN segement in RCL control module (N54)	N4/1 20 ⊟ (1.20) ◄–Ω+► ⊟ 21 (1.21) N4/3 44 ⊟ (1.44) ◄–Ω+► ⊟ 45 (1.45) N54 L ⊟ ◄–Ω+► ⊟ H	Disconnect control module (N4/1, N4/3 or N54) and test with ohmmeter directly on control module (Figure 9 – 13).	115 – 125 Ω	EA/CC/ISC control module (N4/1), CC/ISC control module (N4/3) or RCL control module (N54).

Electrical Test Program – Test

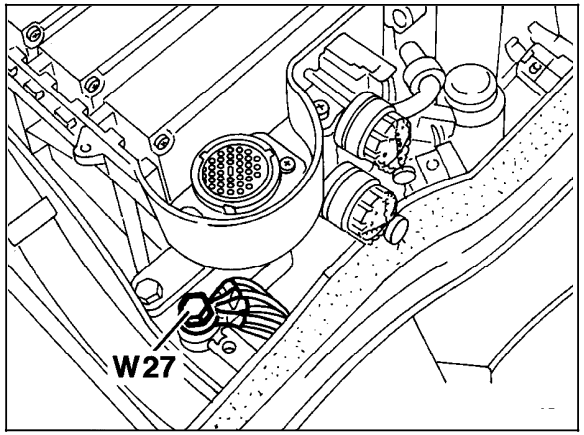

P07-5969-13

Figure 1
Model 129

W27 Ground (module box bracket)

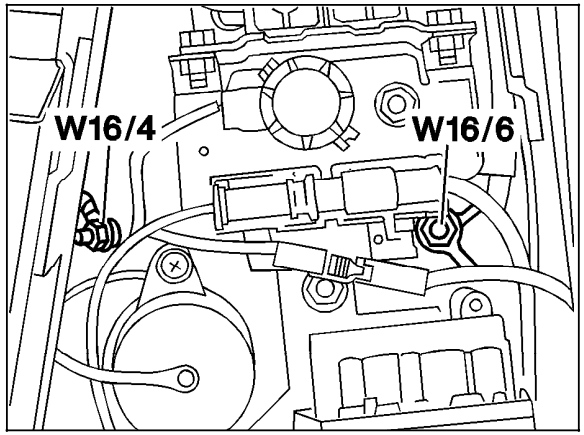

P07-6119-13

Figure 2
Model 202

W16/4 Ground (component compartment - right)

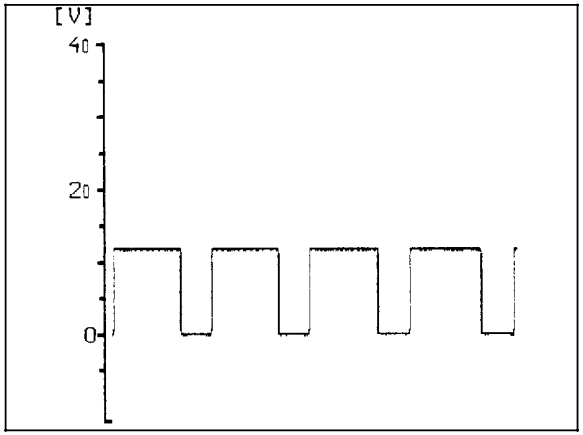

P15-0370-13

Figure 3

Engine speed signal (TNA)

Electrical Test Program – Test

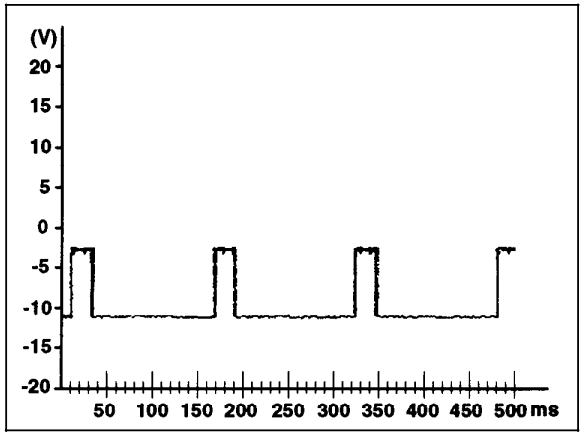

P07-6413-13

Figure 4

CMP sensor signal
t 50 ms

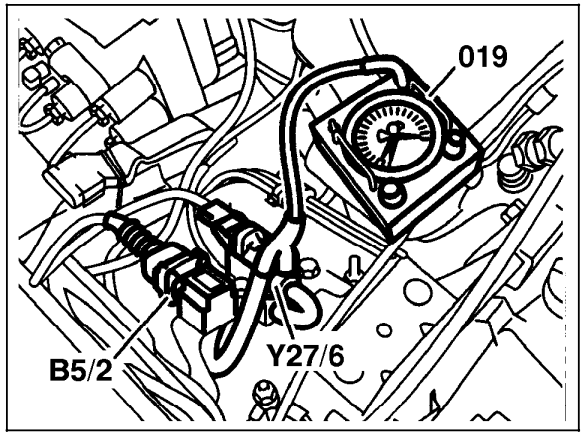

P07-6222-13

Figure 5

019	Vacuum tester
B5/2	DM pressure sensor
Y27/6	Purge flow switchover valve

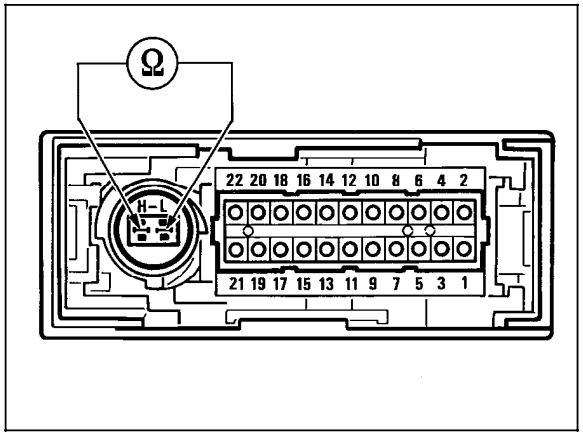

P07-5787-13

Figure 6

Electrical Test Program – Test

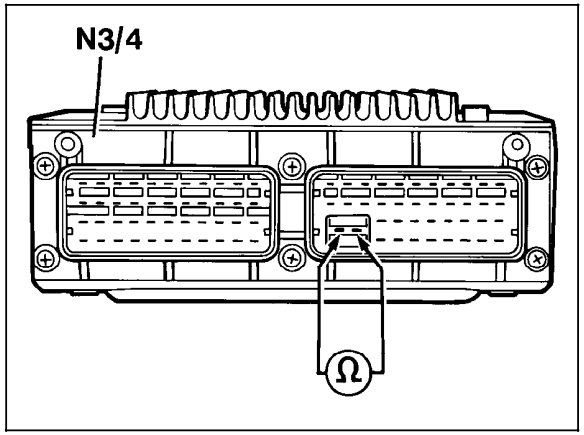

P07-6010-13

Figure 7
Model 129

N3/4 Engine control module (HFM-SFI)

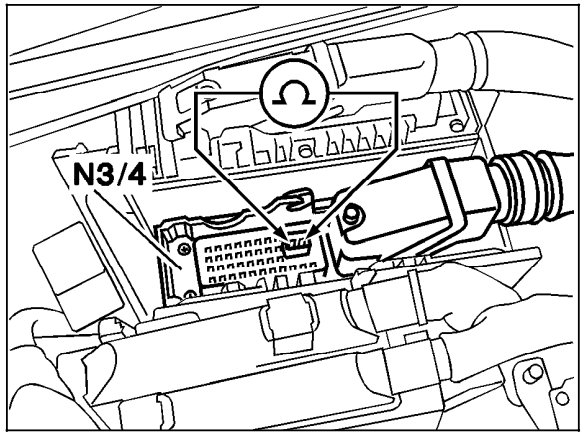

P07-6116-13

Figure 8
Model 202

N3/4 Engine control module (HFM-SFI)

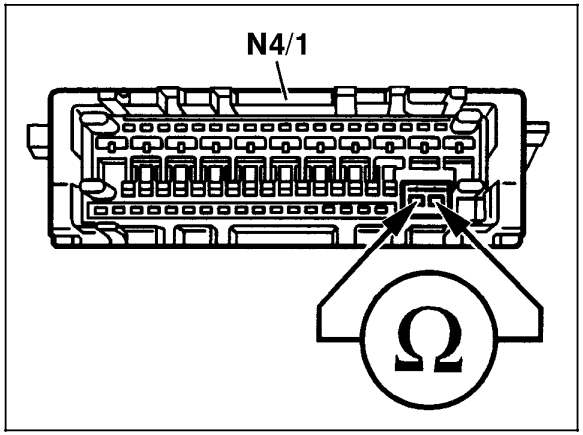

P07-6277-13

Figure 9
Model 129

N4/1 EA/CC/ISC control module

Electrical Test Program – Test

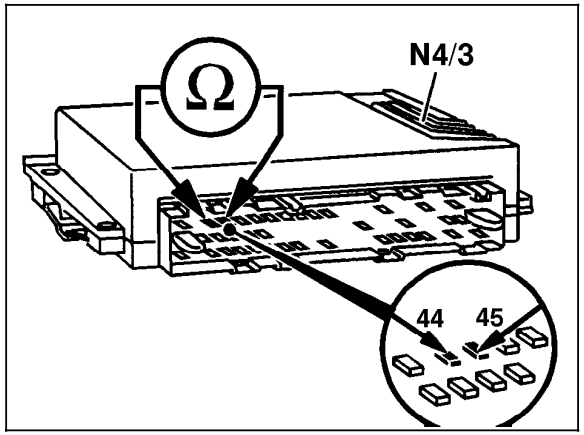

P07-6327-13

Figure 10
Model 129

N4/3 CC/ISC control module

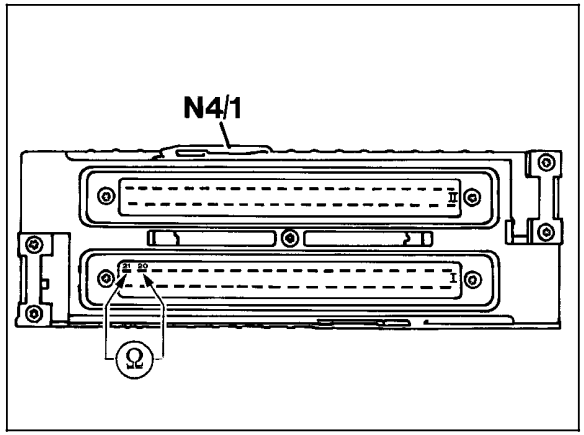

P07-6009-13

Figure 11
Model 202

N4/1 EA/CC/ISC control module

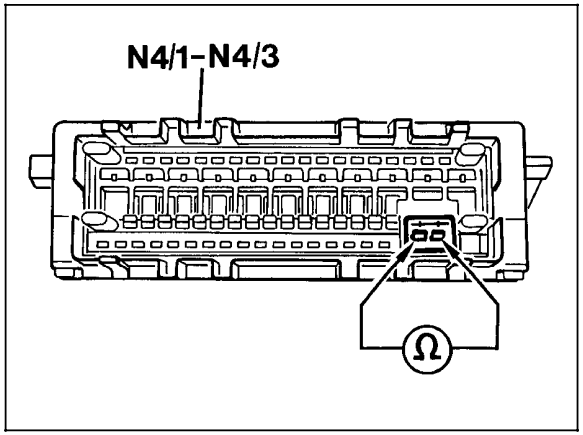

P07-6011-13

Figure 12
Model 202

N4/3 CC/ISC control module

Electrical Test Program – Test

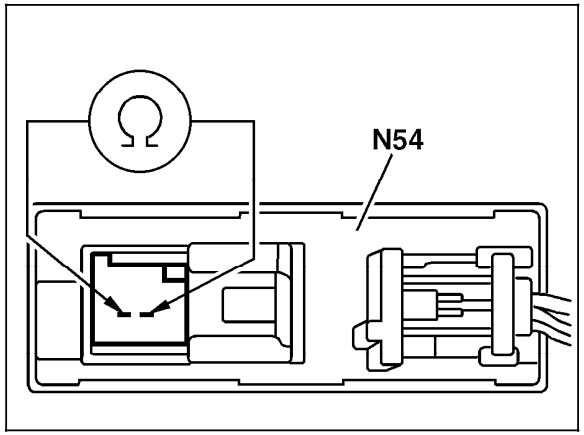

P07.51-0338-13

Figure 13

N54 RCL control module